COMMITTEE OF ADJUSTMENT NOTICE OF PUBLIC HEARING
APPLICATION NO. A-006-2023

TAKE NOTICE that an application has been received by the Town of Innisfil from **Micheal Letarte, Owner,** for a minor variance from Zoning By-law 080-13, pursuant to Section 45 of the *Planning Act*, R.S.O. 1990, c. P.13, as amended.

The subject property is described legally as **PLAN 1503 LOT 48 + ROW OVER PLAN 1503 BLK A** is known municipally as **3785 Whitecap Drive,** and is zoned as **"R1 - Residential".**

The applicant is proposing to construct a detached garage with a gross floor area of 65.5 m^2. The applicant is seeking relief from Section 3.3 (b) of the Zoning By-law which permits a maximum gross floor area of 50 m^2.

The Committee of Adjustment for the Town of Innisfil will consider this application through a conference call on **Thursday, March 16, 2023, at 6:30 PM.**

To participate in the hearing and/or provide comments, you must register by following the link below or scanning the above QR code: https://innisfil.ca/en/building-and-development/committee-of-adjustment-hearings.aspx

Requests can also be submitted in writing to: Town of Innisfil Committee of Adjustment, 2101 Innisfil Beach Road, Innisfil, Ontario, L9S 1A1 or by email to planning@innisfil.ca.

If you wish to receive a copy of the decision of the Committee of Adjustment in respect of the proposed minor variance, you must make a written request to the Secretary-Treasurer of the Committee of Adjustment by way of email or regular mail. The Notice of Decision will also explain the process for appealing a decision to the Local Planning Appeal Tribunal.

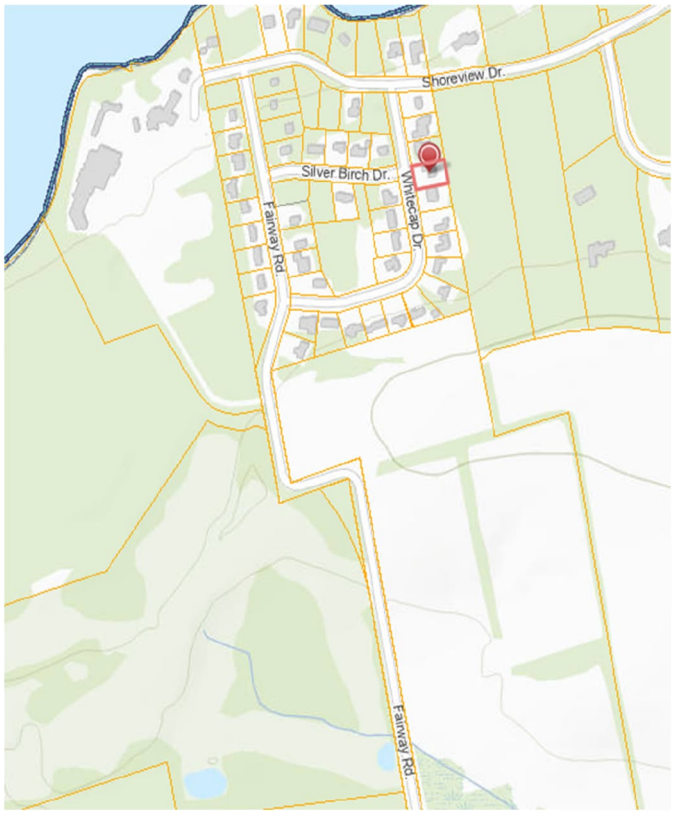

Additional information relating to the proposed application is available on the Town of Innisfil website. Accessible formats are available on request, to support participation in all aspects of the feedback process. To request an alternate format please contact Planning Services at planning@innisfil.ca.

Dated: **February 28, 2023**

Toomaj Haghshenas,
Secretary-Treasurer
thaghshenas@innisfil.ca
705-436-3710 ext. 3316

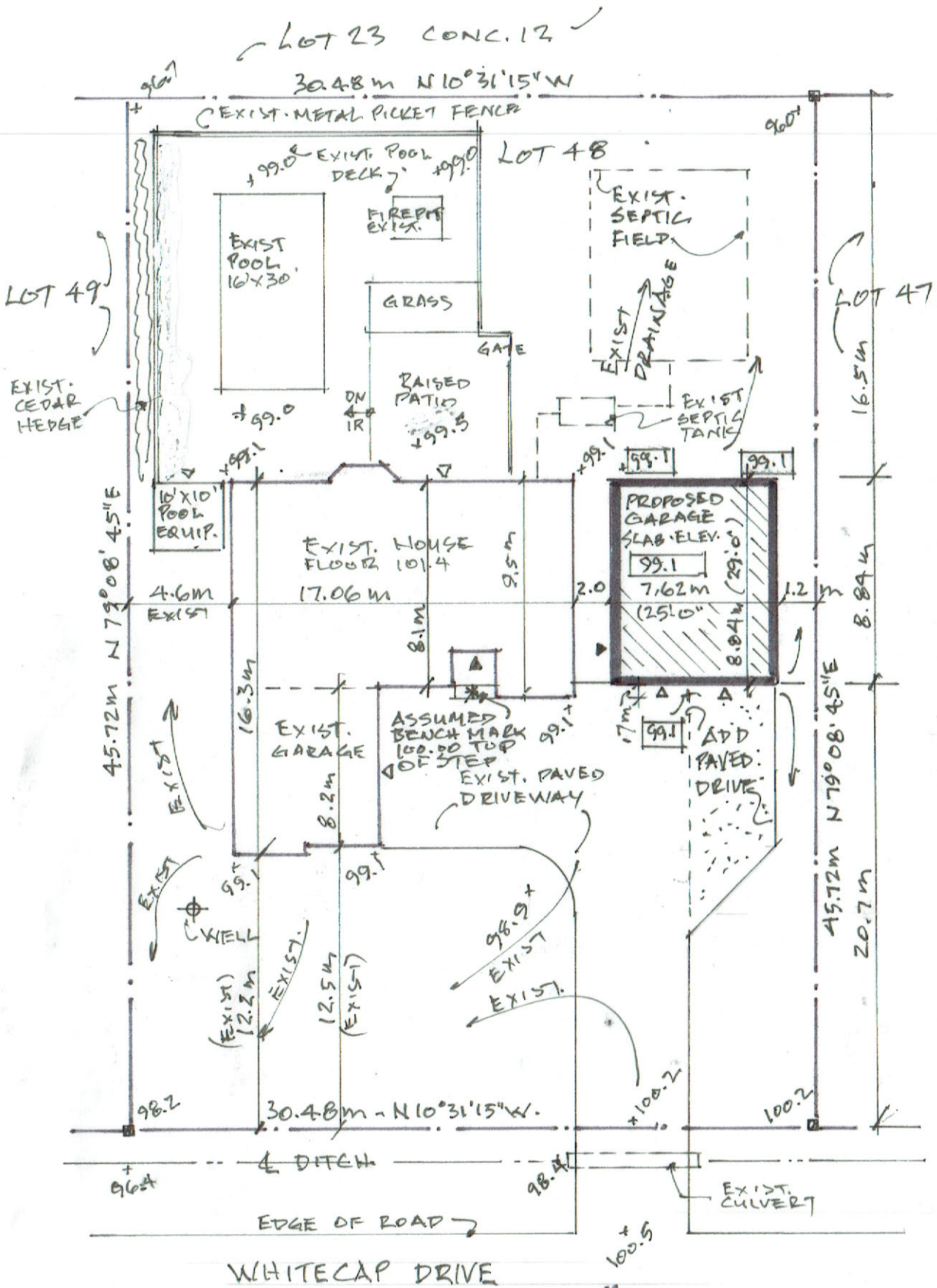

SITE PLAN

SCALE: 1:250 (METRIC) HORIZONTAL

1/1

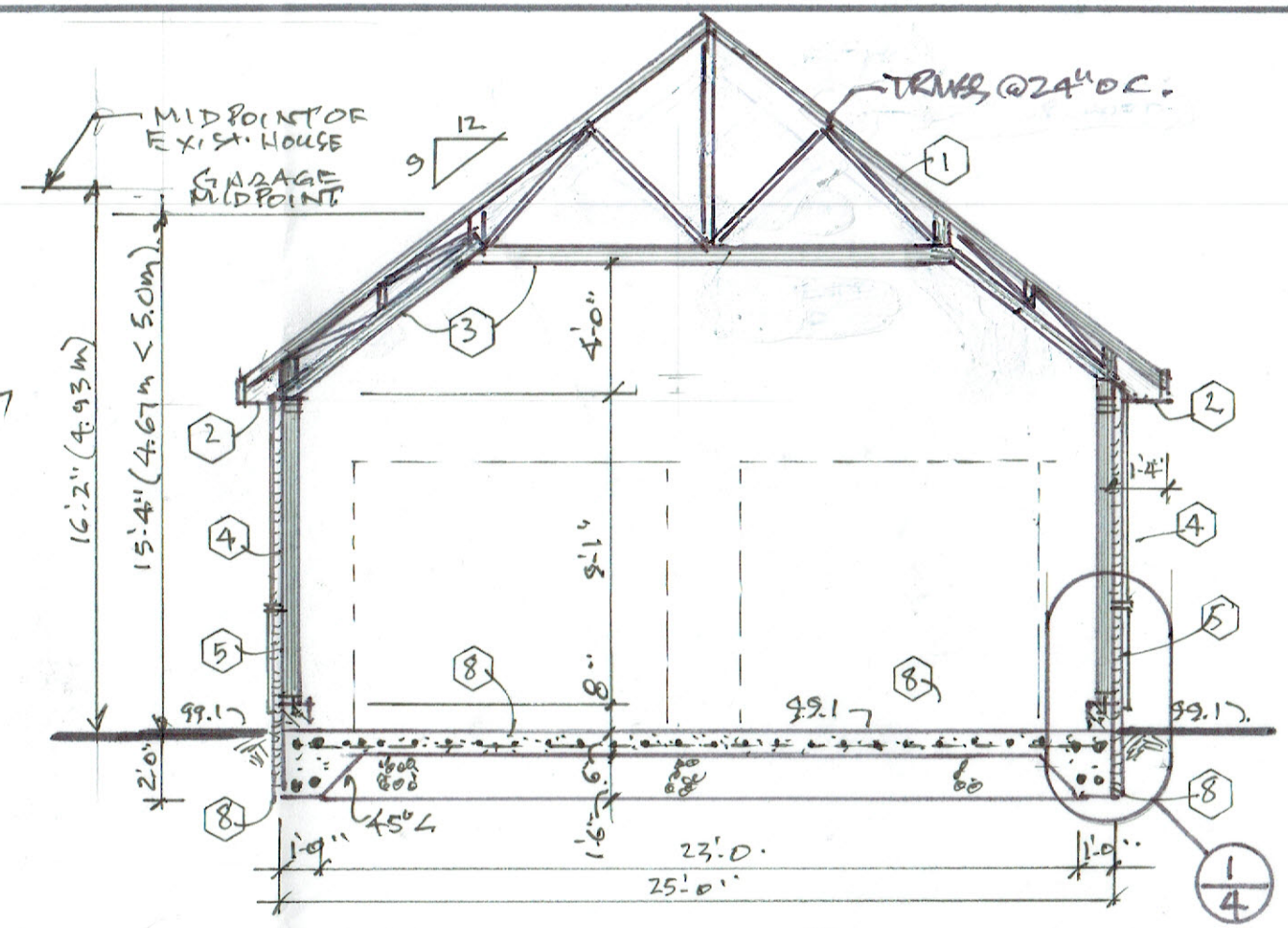

SECTION

SCALE: 3/16" = 1'-0"

2/1

1/4

BUILDING AREAS AND ZONING INFORMATION

LOCATION	IMPERIAL	METRIC
EXIST. 1st FLOOR HOUSE	1,527 sf	141.9 sm
EXIST. ATTACHED GARAGE	497 sf	282.6 sm
EXIST. COVERED FRONT PORCH	44 sf	4.1 sm
EXIST. POOL SHED	100 sf	9.3 sm
EXIST. COVERED FOOTPRINT	2,078 sf	193.2 sm
LOT AREA	14,992.3 sf	1,399.54 sm
EXIST. TOTAL COVERAGE	13.86%	13.86%
EXIST. HOUSE HEIGHT TO MIDPOINT	16.16 f	4.93 m
NEW DETACHED GARAGE	725 sf	67.4 sm
NEW TOTAL FOOTPRINT	2,803 sf	260.54 sm
NEW TOTAL COVERAGE	18.7%	18.7%
NEW DETACHED GARAGE COVERAGE	4.84% < 10	4.84% < 10
NEW GARAGE SIDE YARD	33.94 f	1.2 m
NEW GARAGE FRONT YARD	67.91 f	29.7 m
NEW GARAGE REAR YARD	54.13 f	16.5 m
AVG. GRADE TO NEW GARAGE MIDPOINT	15.33 f < 16.4 f	4.67 m < 5.0m
NEW GARAGE TO EXIST. HOUSE	6.56 f	2.0 m

LICENSED PROFESSIONAL ENGINEER
H. S. KRANTZBERG
PROVINCE OF ONTARIO

JOB NO.	DATE	SCALE	DWG NO.
01-23	JAN. 2 / 23	1:250	1 OF 4

DWG TITLE
SITE PLAN
CROSS SECTION
ZONING NOTES

PROJECT
DETACHED GARAGE
3785 WHITECAP DRIVE
INNISFIL, ONTARIO
LOT 48, PLAN 1503

CLIENT
MIKE LETARTE
3785 WHITECAP DRIVE
INNISFIL, ONTARIO
416-258-2501

DRAFTING & DESIGN SERVICES
133 BROPHY'S LANE
BLUE MOUNTAINS, ONTARIO
L0Y 0K4
TEL: 705-445-8210 CEL: 705-443-1948
FAX: 705-445-6442
E: gary.hodson@sympatico.ca

The undersigned has reviewed & taken responsibility for this design & has the qualifications & meets the requirements set out in 2.17 of the O.B.C. to be a designer.

QUALIFICATION INFORMATION
GARY HODSON BCIN # 28267

REGISTRATION INFORMATION
DRAFTING & DESIGN SERVICES BCIN # 31889

SIGNATURE

DATE Jan 19/23

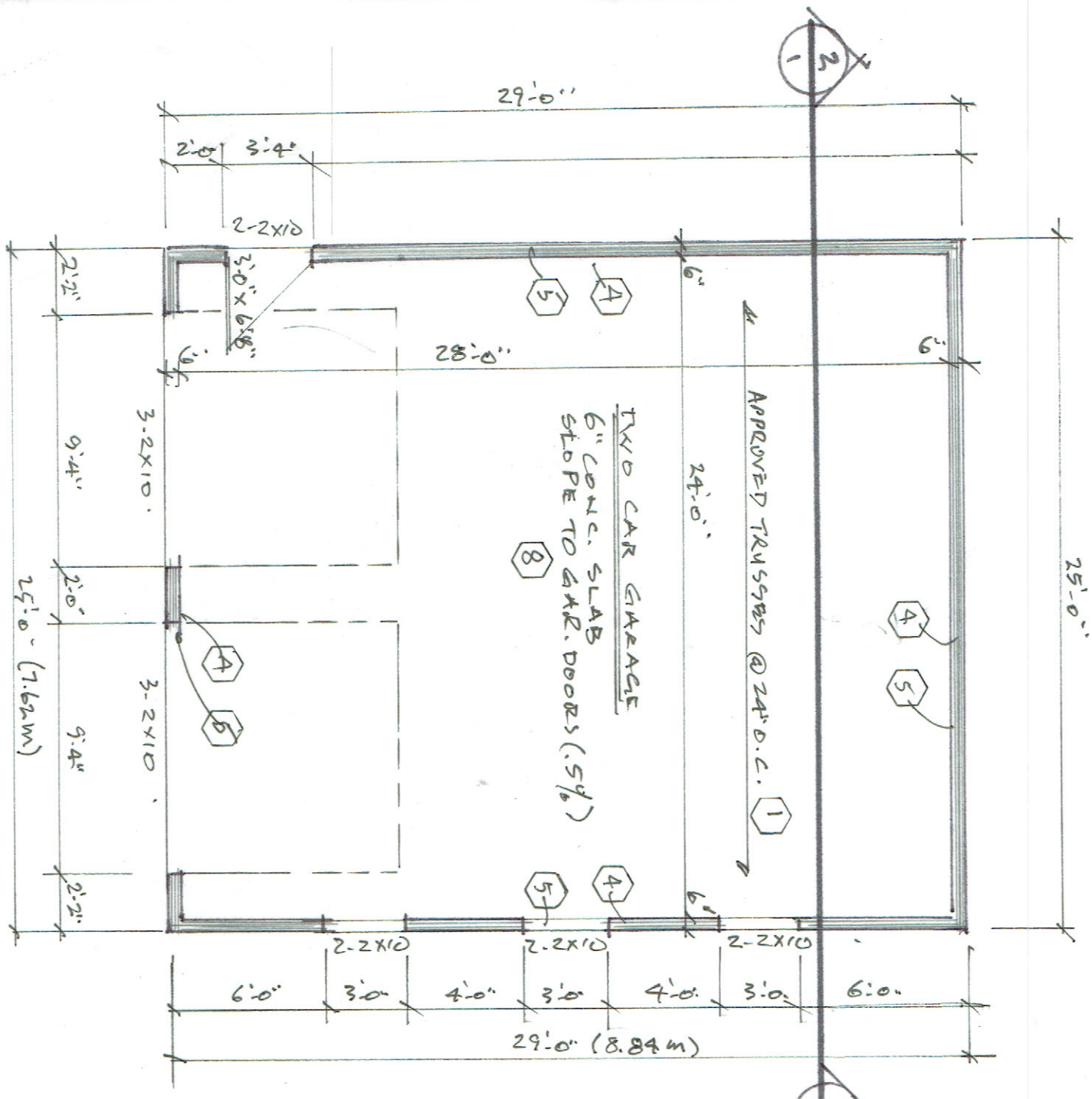

GROUND FLOOR PLAN
SCALE: 3/16" = 1'-0"

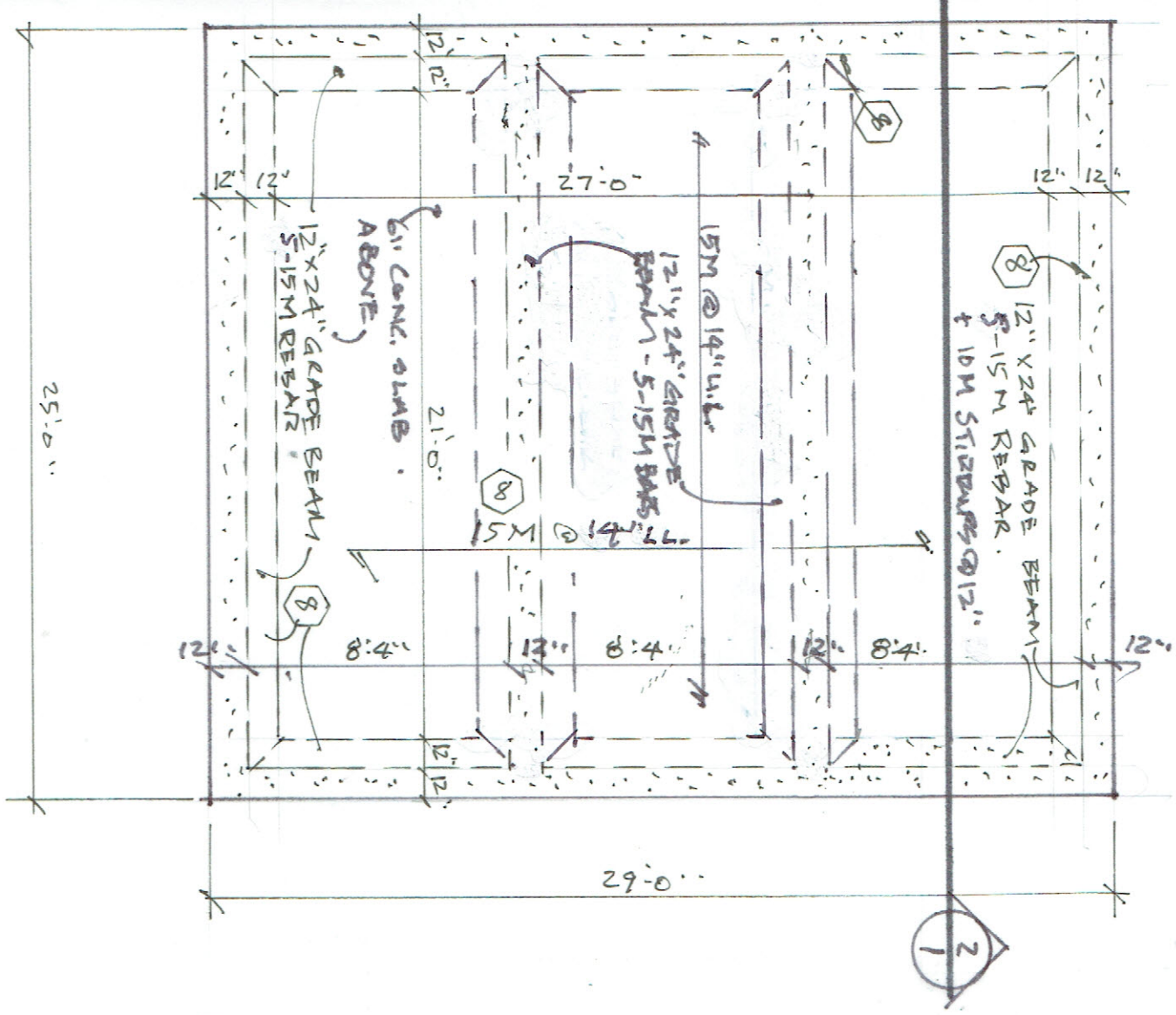

FOUNDATION / SLAB PLAN
SCALE: 3/16" = 1'-0"

The undersigned has reviewed & taken responsibility for this design & has the qualifications & meets the requirements set out in 2.17 of the O.B.C. to be a designer.

QUALIFICATION INFORMATION
GARY HODSON BCIN # 28267

REGISTRATION INFORMATION
DRAFTING & DESIGN SERVICES BCIN # 31889

SIGNATURE Gary Hodson DATE Jan 19/23

DRAFTING & DESIGN SERVICES
133 BROPHY'S LANE
BLUE MOUNTAINS, ONTARIO
L0Y 0K4
TEL: 705-445-8210 CEL: 705-443-1948
FAX: 705-445-6442
E: gary.hodson@sympatico.ca

PROJECT
DETACHED GARAGE
3785 WHITECAP DRIVE
INNISFIL, ONTARIO
LOT 48, PLAN 1503

CLIENT
MIKE LETARTE
3785 WHITECAP DRIVE
INNISFIL, ONTARIO
416-258-2501

DWG TITLE
FIRST FLOOR PLAN
FOUNDATION / SLAB PLAN

JOB NO. 01-23
DATE JAN. 2 / 23
SCALE 3/16" = 1'-0"
DWG. NO. 2 OF 4

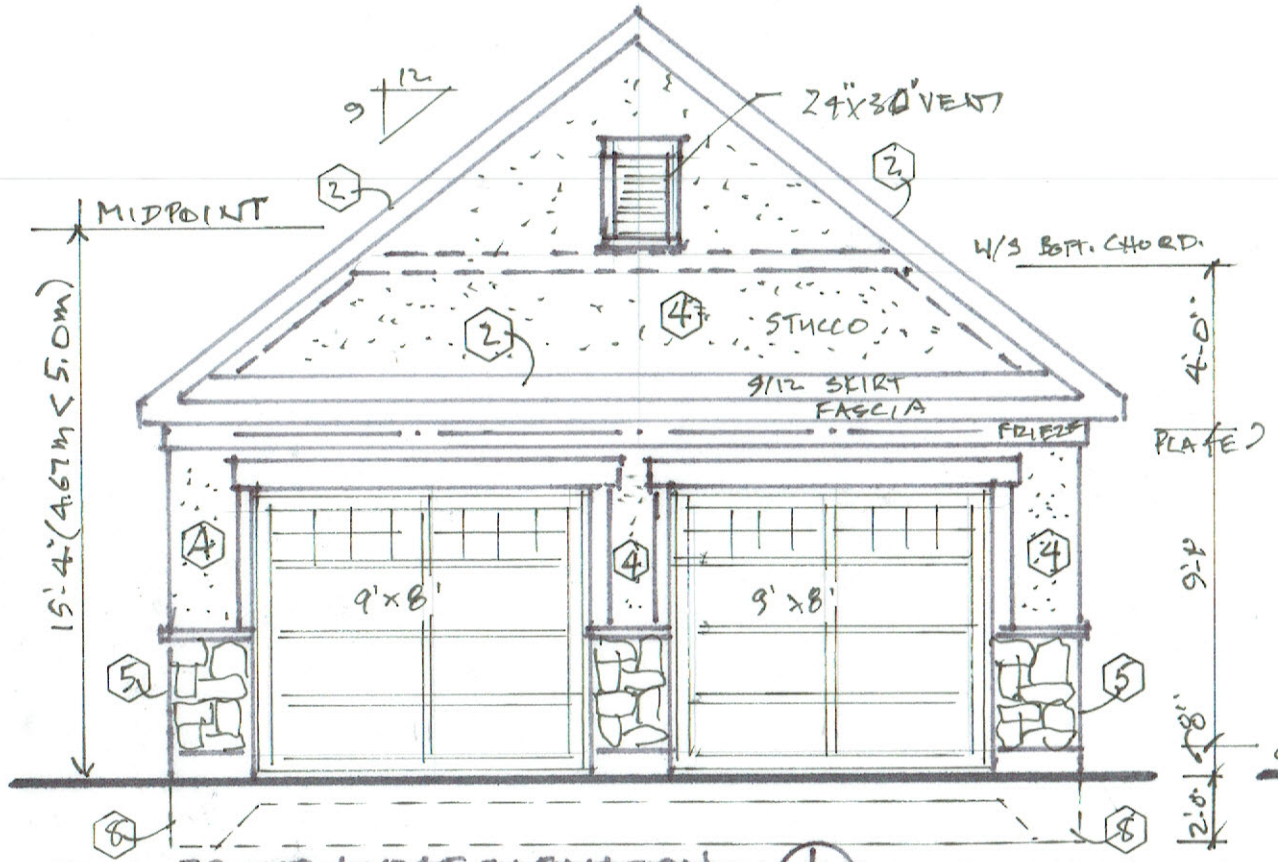

FRONT / WEST ELEVATION (1/3)
SCALE: 3/16" = 1'-0"

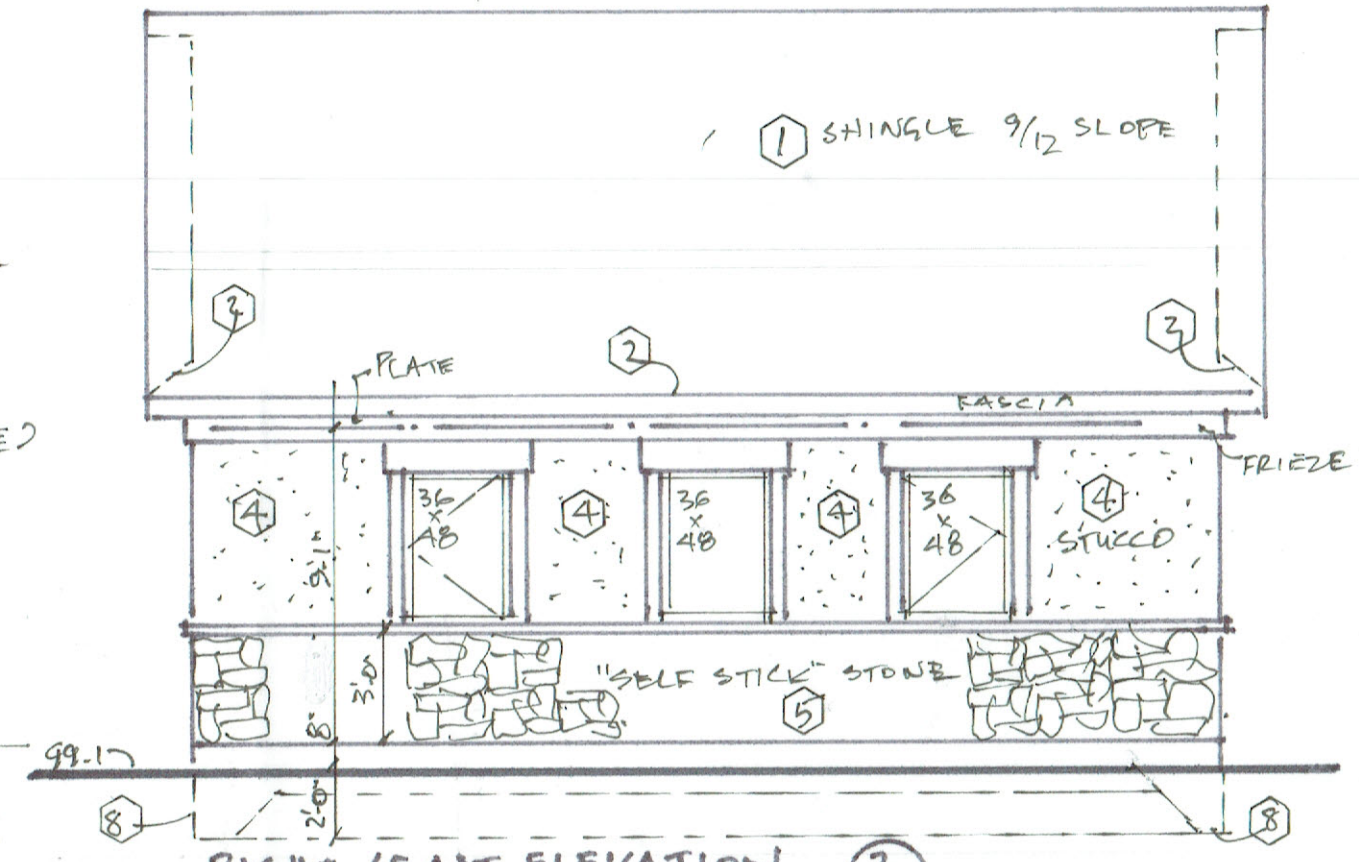

RIGHT / EAST ELEVATION (2/3)
SCALE: 3/16" = 1'-0"

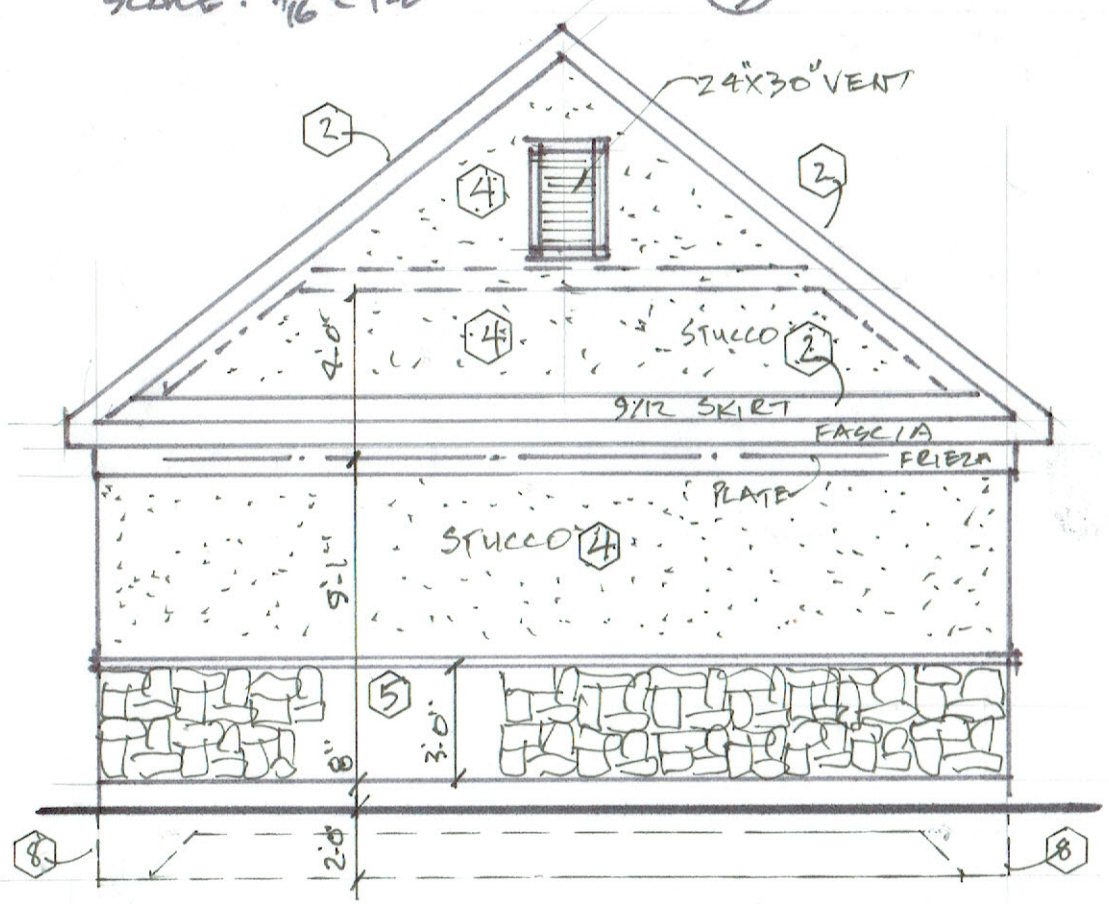

REAR / EAST ELEVATION (3/3)
SCALE: 3/16" = 1'-0"

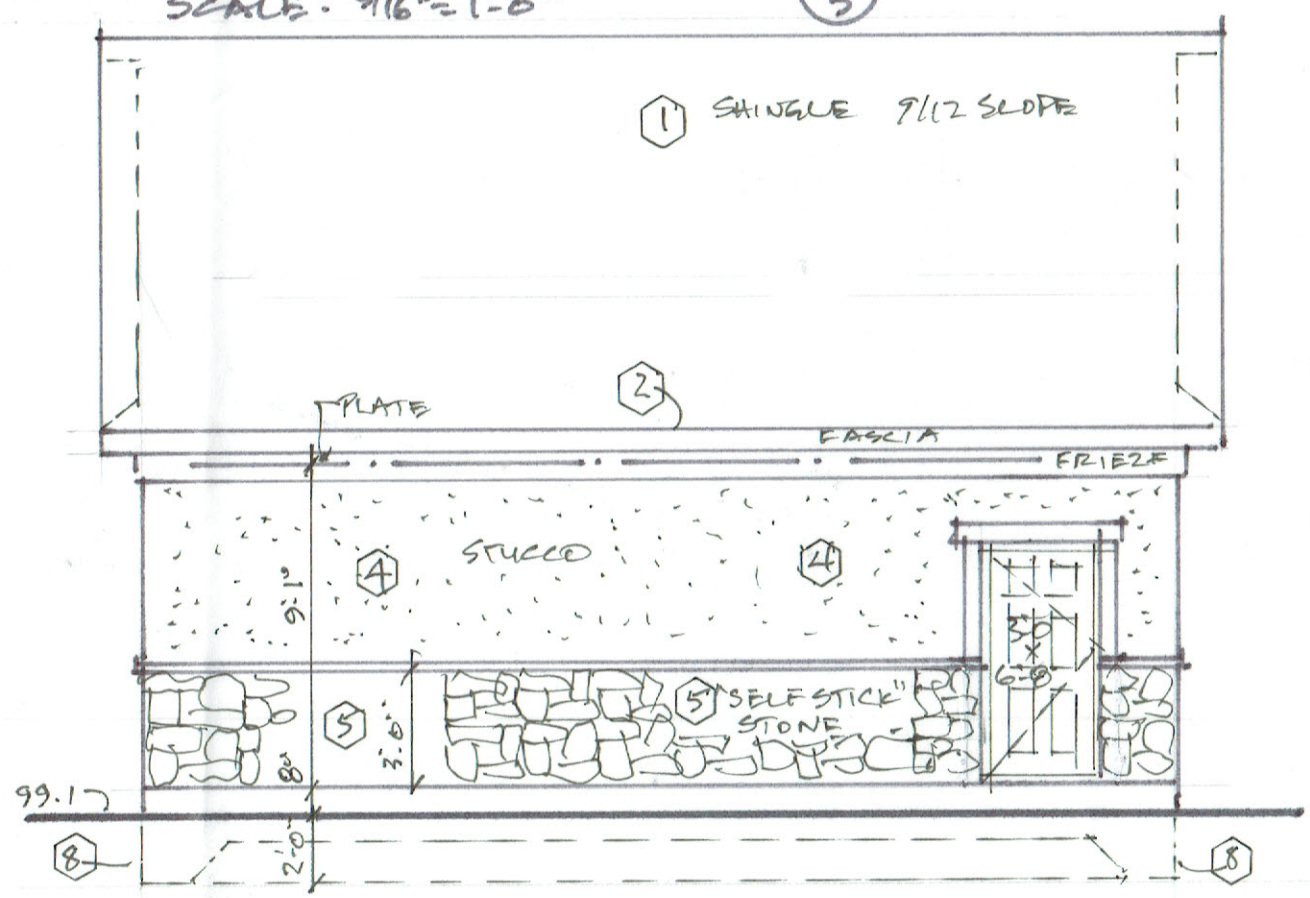

LEFT / NORTH ELEVATION (4/3)
SCALE: 3/16" = 1'-0"

JOB NO. 01-23	DATE JAN. 2 / 23
SCALE 3/16" = 1'-0"	DWG. NO. 3 OF 4

DWG TITLE
EXTERIOR ELEVATIONS

PROJECT
DETACHED GARAGE
3785 WHITECAP DRIVE
INNISFIL, ONTARIO
LOT 48, PLAN 1503

CLIENT
MIKE LETARTE
3785 WHITECAP DRIVE
INNISFIL, ONTARIO
416-258-2501

DRAFTING & DESIGN SERVICES
133 BROPHY'S LANE
BLUE MOUNTAINS, ONTARIO
L0Y 0K4
TEL: 705-445-8210 CEL: 705-443-1948
FAX: 705-445-6442
E: gary.hodson@sympatico.ca

The undersigned has reviewed & taken responsibility for this design & has the qualifications & meets the requirements set out in 2.17 of the O.B.C. to be a designer.

QUALIFICATION INFORMATION
GARY HODSON BCIN # 28267

REGISTRATION INFORMATION
DRAFTING & DESIGN SERVICES BCIN # 31889

SIGNATURE Gary Hodson DATE Jan. 19/23

LICENSED PROFESSIONAL ENGINEER
H. S. KRANTZBERG
PROVINCE OF ONTARIO

ROOF CONSTRUCTION

1. TRUSS: 30 YEAR ASPHALT SHINGLE (TO MATCH EXISTING HOUSE), ½" SPRUCE PLYWOOD SHEATHING, ROOF TRUSSES @ 24" O.C., TOP CHORD WITH 9/12 SLOPE, SEE CROSS SECTION AND TRUSS DETAILS BY MANUFACTURER - BRACE AS REQUIRED BY TRUSS MANUFACTURER

2. OVERHANG: 16" FROM SHEATHING, 2 x 6 ALUMINUM CLAD FASCIA, PREFINISHED VENTED ALUMINUM SOFFIT VENTS, 4" ALUMINUM GUTTER WITH 3 x 3 ALUMINUM DOWNSPOUTS

CEILING CONSTRUCTION

3. SLOPING & FLAT GARAGE: TOP CHORD OF ROOF TRUSS @ 24" O.C. WITH 9/12 SLOPE, FLAT CEILING TIE @ 24" O.C. (CONFIRM BY TRUSS MANUFACTURER BRACE AS REQUIRED BY TRUSS MANUFACTURER))

WALL CONSTRUCTION

4. UPPER EXTERIOR: 2 x 6 @ 16" O.C STUD, 7/16" OSB SHEATHING, TYVEK WIND BARRIER, 1.5" FOAM "EPS" INSULATION, STARTER MESH, ½" SCRATCH COAT, ¼" FINISH COAT OF STUCCO, COLOUR TO MATCH EXISTING HOUSE

5. LOWER EXTERIOR: 2 x 6 @ 16" O.C STUD, 7/16" OSB SHEATHING, TYVEK WIND BARRIER, 1.5" FOAM "EPS" INSULATION, STARTER MESH, ½" SCRATCH COAT, 1" THICK STONE SLICES (3'-0" HIGH), COLOUR TO BE DETERMINED BY OWNER, SEPARATE STONE SLICE FROM STUCCO WITH 2" x 3" CONTINUOUS PRECAST SILL AND METAL FLASHING, STUDDING ON FRONT AND REAR GABLE WALLS TO EXTEND TO THE UNDER SIDE OF THE BOTTOM CHORD OF THE SLOPING TRUSS AND THE UNDER SIDE OF THE FLAT CHORD

FOUNDATION CONSTRUCTION

6. GARAGE WALL: 8" CONCRETE BLOCK CURB SECURED TO CONCRETE GRADE BEAM (12" X 24" DEEP - 4,650 psi – 32 MPa) WITH ½" x 16" @ 6'-0" O.C. ANCHOR BOLTS SET INTO GRADE BEAM 6" GRADE BEAM TO CONTAIN 5 – 15M REBAR (SEE DETAIL), 3" COVER ON UNDERSIDE OF GRADE BEAM AND 2" COVER ON SIDE OF GRADE BEAM

7. SILL PLATE: SILL GASKET, 2 x 6 PLATE, INTO ANCHOR BOLTS @ 6'-0" O.C. (SEE DETAIL)

CONCRETE SLAB

8. GARAGE FLOOR: 6" CONCRETE SLAB (4,650 psi – 32 MPa WITH .45 WATER CEMENT RATIO) ON 18" OF ¾" CLEAR STONE ON COMPACTED SANDFILL, 15M @ 14" O.C. REBAR EACH WAY, REBAR TO EXTEND 6" INTO GRADE BEAM, 3" COVER ON UNDERSIDE OF SLAB (SEE DETAIL)

GENERAL NOTES

1. SUBCONTRACTORS SHALL CHECK & VERIFY ALL DIMENSIONS & REPORT ANY DISCREPANCIES TO BUILDER BEFORE PROCEEDING WITH WORK.
2. ALL FOUNDATIONS SHALL BE PLACED ON SOLID NATURAL SOIL WITH A MINIMUM BEARING CAPACITY OF 1,500 psf (75 KPa)
3. ALL LOOSE & ORGANIC MATERIAL SHALL BE REMOVED & REPLACED WITH SABDFILL & COMPACTED IN 12" LAYERS BENEATH ALL SLABS.
4. ALL BACKFILL MATERIAL SHALL BE CLEAN & FREE OF ANY DEBRIS.
5. ALL WORK TO CONFORM TO 2012 EDITION OF THE ONTARIO BUILDING CODE.
6. ALL DIMENSIONS SHOWN ON DRAWINGS ARE EXPRESSED IN FEET & INCHES UNLESS NOTED OTHERWISE.
7. DRAWINGS SHALL NOT BE SCALED.
8. CONCRETE TO POSSESS A MINIMUM 5% TO 8% AIR CONTENT & A MINIMUM 28 DAY COMPRESSIVE STRENGTH WITH WATER CEMENT RATIOS OF 4,650 psi (32 MPa) & .45 W/C RATIO
9. ALL STRUCTURAL LUMBER TO BE NO. 2 EASTERN SPRUCE OR BETTER UNLESS NOTED OTHERWISE.
10. ALL WINDOW & DOOR OPENINGS ARE APPROXIMATE WIDTH x HEIGHT IN INCHES AND MUST BE CONFIRMED BY WINDOW & DOOR SUPPLIER.
11. PLUMBING AND ELECTRICAL DRAWINGS TO BE PROVIDED BY RESPECTIVE SUBCONTRACTORS.
12. LOADING CONDITIONS USED FOR THE PURPOSE OF THIS BUILDING DESIGN:
    - GROUND SNOW LOAD: 54.3 psf (2.6 kPa)
    - TOP CHORD SNOW LOAD: 38.3 psf
    - TOP CHORD DEAD LOAD: 6 psf
    - BOTT. CHORD (CEILING) DEAD LOAD: 7.3 psf
13. ROOF TRUSS FRAMING TO BE CONFIRMED BY MEANS OF A FRAMING DRAWING PROVIDED BY TRUSS MANUFACTURER.
14. ALL COLOURS AND FINISHES TO BE CONFIRMED BY OWNER.

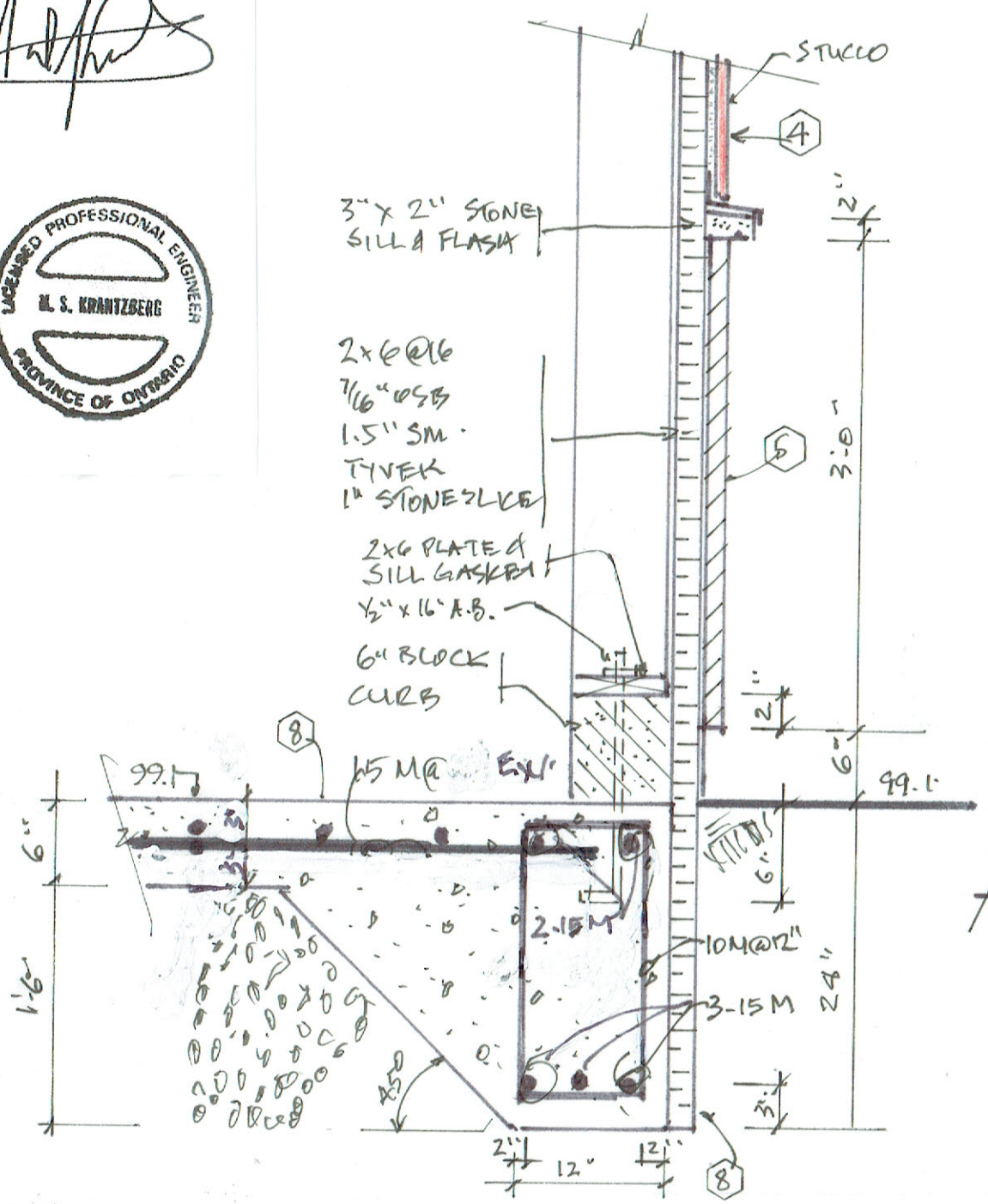

WALL / SLAB DETAIL
SCALE : 1" = 1'-0"
1/4

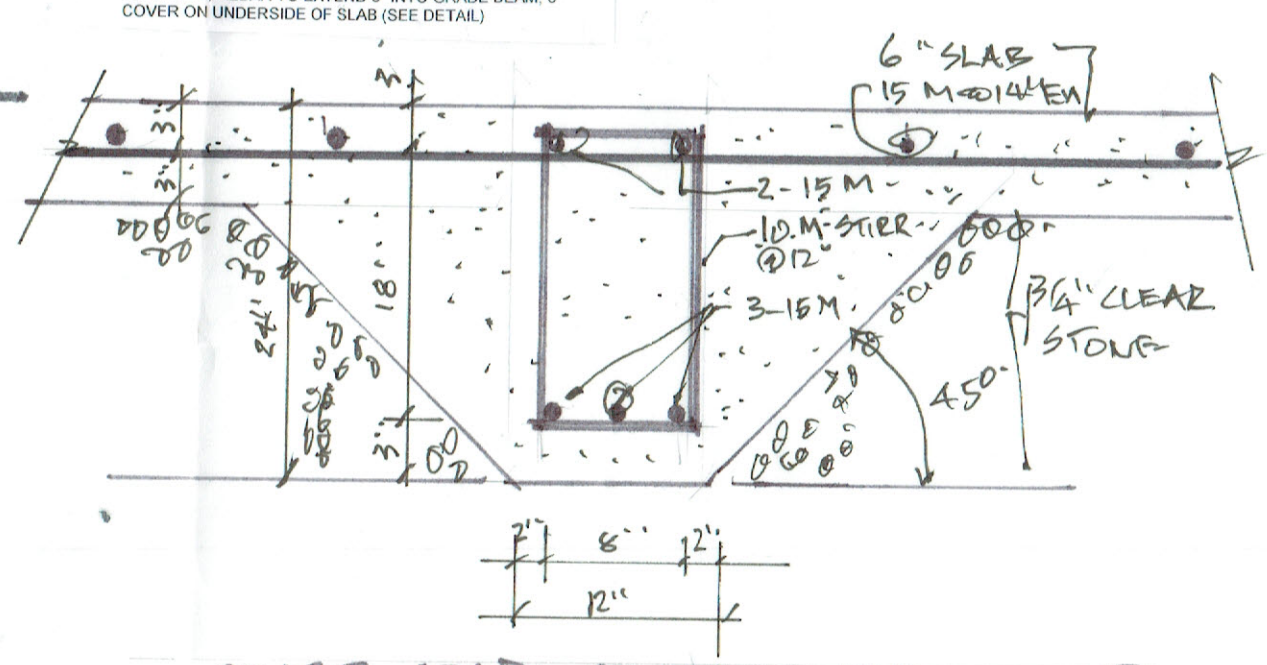

CENTER GRADE BEAM DETAIL
SCALE : 1" = 1'-0"
2/4

JOB NO	DATE	SCALE	DWG NO
01-23	JAN. 2 / 23	1" = 1'-0"	4 OF 4

DWG TITLE: DETAIL GENERAL NOTES

PROJECT: DETACHED GARAGE
3785 WHITECAP DRIVE
INNISFIL, ONTARIO
LOT 48, PLAN 1503

CLIENT: MIKE LETARTE
3785 WHITECAP DRIVE
INNISFIL, ONTARIO
416-258-2501

DRAFTING & DESIGN SERVICES
133 BROPHY'S LANE
BLUE MOUNTAINS, ONTARIO
L0Y 0K4
TEL: 705-445-8210 CEL: 705-443-1948
FAX: 705-445-6442
E: gary.hodson@sympatico.ca

The undersigned has reviewed & taken responsibility for this design & has the qualifications & meets the requirements set out in 2.17 of the O.B.C. to be a designer.

QUALIFICATION INFORMATION
GARY HODSON BCIN # 28267

REGISTRATION INFORMATION
DRAFTING & DESIGN SERVICES BCIN # 31889

SIGNATURE

Jan 19/23
DATE

25-00-00

Truss Connector Total List		
Manuf	Product	Qty
MiTek	STC26	16

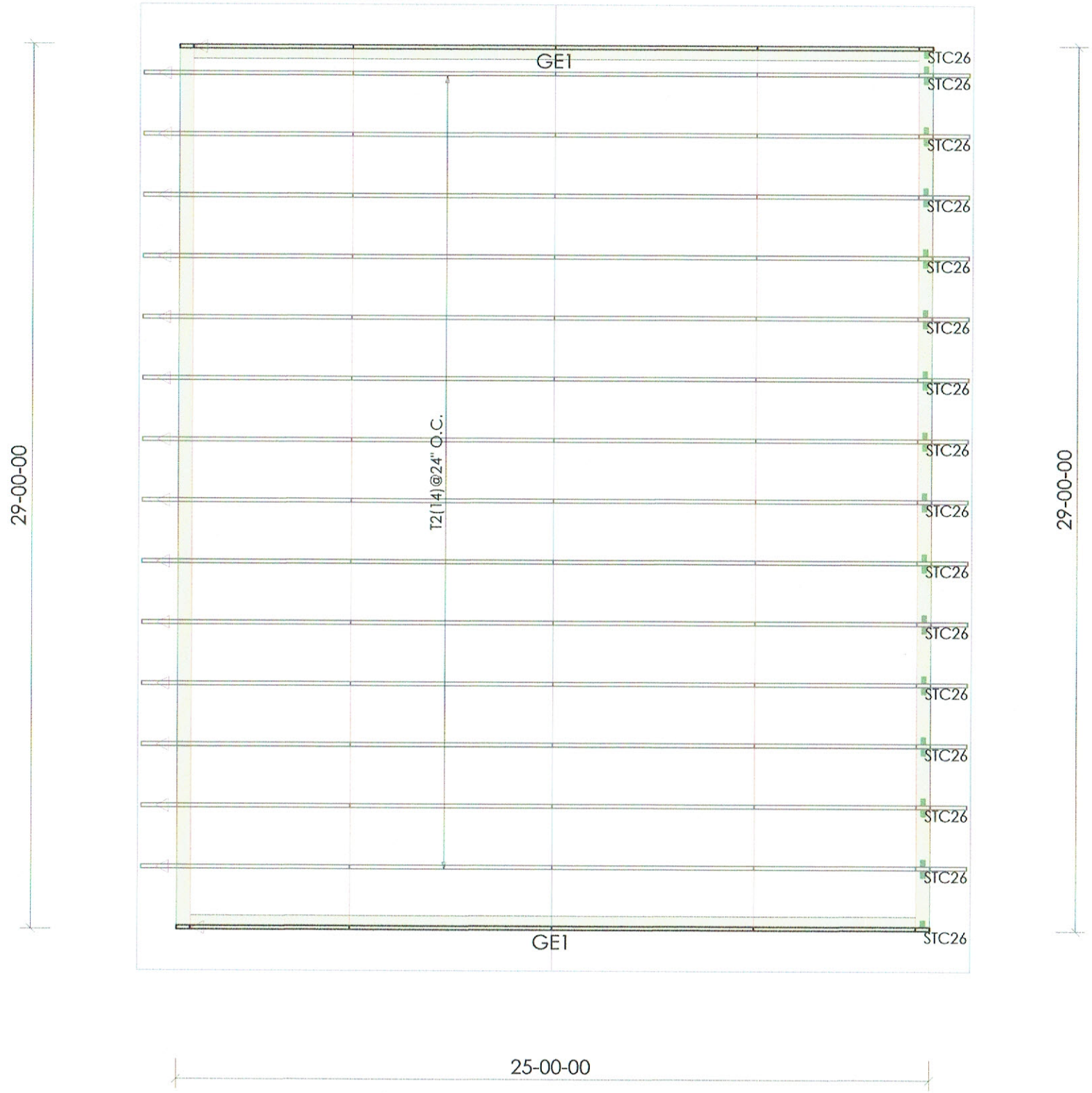

JOB INFO:	
JOB#:	C6622
TAG:	Letarte Garage
DEALER:	C.O.D. - Tom
DESIGNER:	Dylan Chin-a-loy
DATE:	1/23/2023

LAYOUT INFO:	
PITCH:	9/12
HEEL:	18"
OVERHANG:	16" from stud
SPACING:	24" o.c.

DESIGN INFO:		
CODE:	OBC 2012,	Residential - HSB (NBCC Part 9)
GSL	54.3 lb/ft²	
T.C.D.L.	6.0 lb/ft²	
B.C.L.L.	0.0 lb/ft²	
B.C.D.L.	7.3 lb/ft²	

NOTES:

APPROXIMATE ROOF AREA: 1095.14 SQFT

Truss left end indicator corresponding to individual truss drawings. Ensure trusses are not installed in reverse.

STOP

DO NOT INSTALL IMPROPERLY FITTING TRUSSES.
CONTACT PHOENIX BUILDING COMPONENTS.
DO NOT CUT, MODIFY, OR REPAIR COMPONENTS **WITHOUT CONSULTING PHOENIX BUILDING COMPONENTS 1-888-262-2524**

LVL BY GLOBAL LVL INC., 2.0E-3300Fb CCMC# 13543

I-JOISTS BY ANTHONY EACOM, INC. CCMC# 13053-R ONTARIO MINISTER'S RULING #07-16-174

phoenix BUILDING COMPONENTS

R1

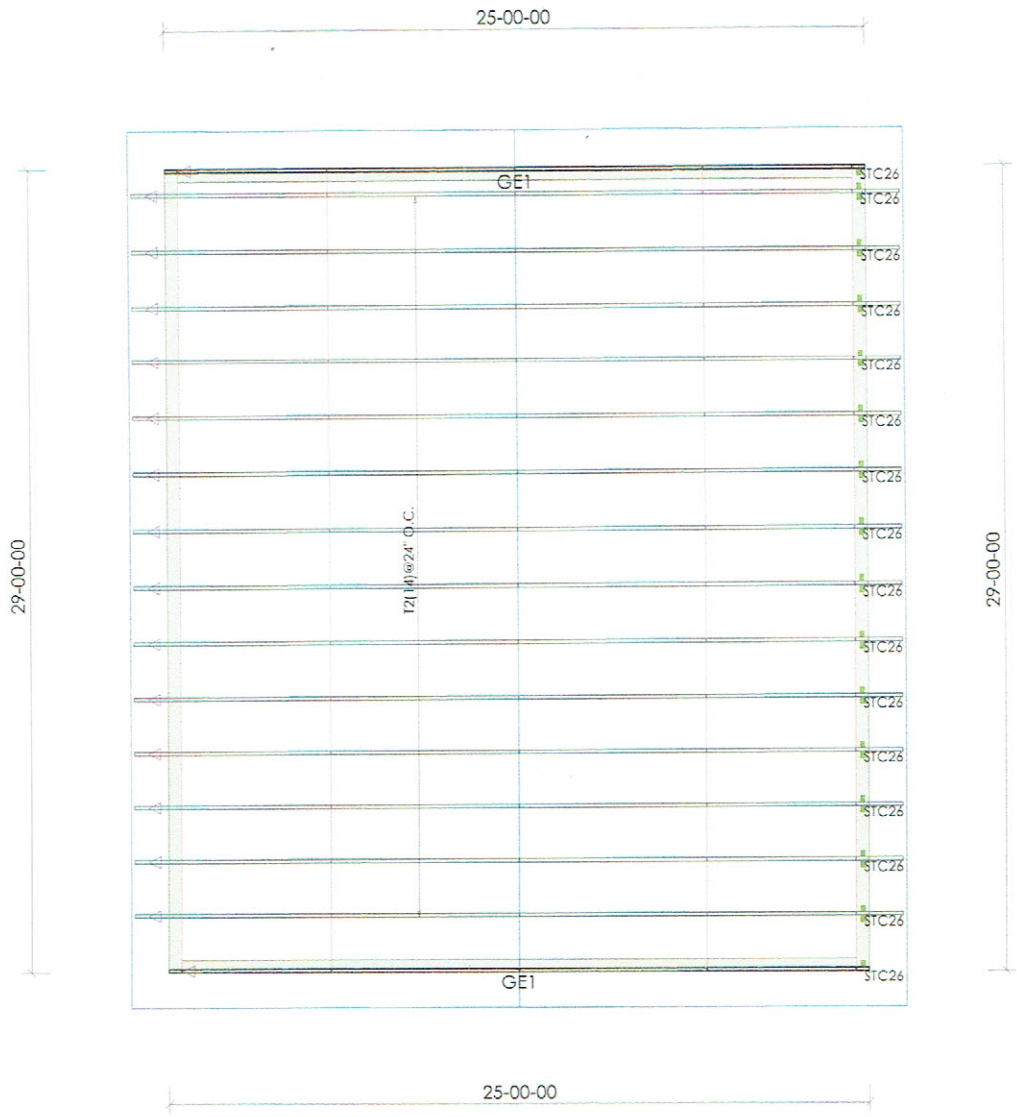

Truss Connector Total List		
Manuf	Product	Qty
MiTek	STC26	16

JOB INFO:		LAYOUT INFO:		DESIGN INFO:		
JOB#:	C6622	PITCH:	9/12	CODE:	OBC 2012,	Residential - HSB (NBCC Part 9)
TAG:	Letarte Garage	HEEL:	18"	GSL	54.3 lb/ft²	
DEALER:	C.O.D. - Tom	OVERHANG:	16" from stud	T.C.D.L.	6.0 lb/ft²	
DESIGNER:	Dylan Chin-a-loy	SPACING:	24" o.c.	B.C.L.L.	0.0 lb/ft²	
DATE:	1/23/2023			B.C.D.L.	7.3 lb/ft²	

NOTES:

APPROXIMATE ROOF AREA: 1095.14 SQFT

◁ Truss left end indicator corresponding to individual truss drawings. Ensure trusses are not installed in reverse.

STOP

DO NOT INSTALL IMPROPERLY FITTING TRUSSES.
CONTACT PHOENIX BUILDING COMPONENTS.
DO NOT CUT, MODIFY, OR REPAIR COMPONENTS WITHOUT CONSULTING
PHOENIX BUILDING COMPONENTS 1-888-262-2524

LVL BY GLOBAL LVL INC., 2.0E-3300Fb CCMC# 13543

I-JOISTS BY ANTHONY EACOM, INC. CCMC# 13053-R ONTARIO MINISTER'S RULING #07-16-174

phoenix BUILDING COMPONENTS

R1

JOB NAME	TRUSS NAME	QUANTITY	PLY	JOB DESC.	DRWG NO.
C6622-1	T2	14	1	Letarte Garage -Roof TRUSS DESC.	

Phoenix Building Components, Utopia, On. L0M 1T0, T. Partridge

Version 8.620 S Jan 12 2023 MiTek Industries, Inc. Mon Jan 23 17:04:55 2023 Page 1

ID:LqVJ4ToEFHICNSQepBUntYzu4ET-7CphUKNEIPMxXo2HK385BndWheTEpMeirR1Lp2zsQVs

Scale = 1:67.6

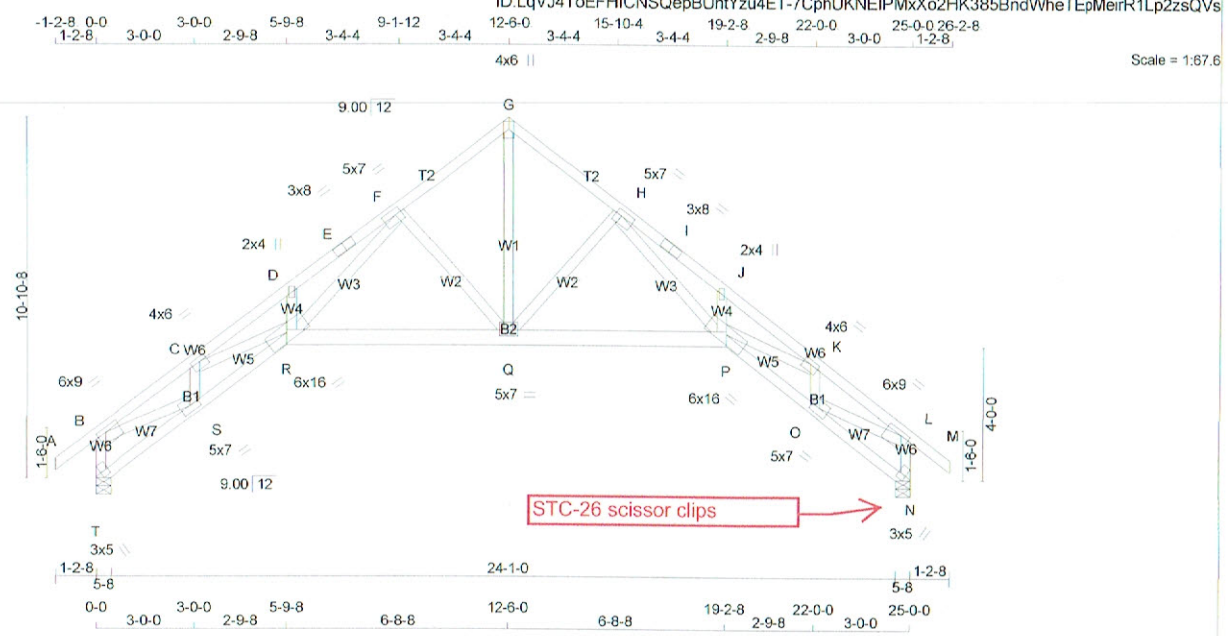

TOTAL WEIGHT = 14 X 131 = 1831 lb [M][F]

LUMBER

N. L. G. A. RULES

CHORDS	SIZE		LUMBER	DESCR.
T - B	2x4	DRY	1650F 1.5E	SPF
A - E	2x4	DRY	2100F 1.8E	SPF
E - G	2x4	DRY	2100F 1.8E	SPF
G - I	2x4	DRY	2100F 1.8E	SPF
I - M	2x4	DRY	2100F 1.8E	SPF
N - L	2x4	DRY	1650F 1.5E	SPF
T - R	2x4	DRY	1650F 1.5E	SPF
R - P	2x6	DRY	1650F 1.5E	SPF
P - N	2x4	DRY	1650F 1.5E	SPF
ALL WEBS	2x4	DRY	1650F 1.5E	SPF

DRY: SEASONED LUMBER.

PLATES (table is in inches)

JT	TYPE	PLATES	W	LEN	Y	X
B	TMVW-t	MT20	6.0	9.0	1.50	3.25
C	TMWW-t	MT20	4.0	6.0	1.50	2.75
D	TMW+w	MT20	2.0	4.0		
E	TS-t	MT20	3.0	8.0		
F	TMWW-t	MT20	5.0	7.0	2.00	2.25
G	TTW+p	MT20	4.0	6.0	Edge	
H	TMWW-t	MT20	5.0	7.0	2.00	2.25
I	TS-t	MT20	3.0	8.0		
J	TMW+w	MT20	2.0	4.0		
K	TMWW-t	MT20	4.0	6.0	1.50	2.75
L	TMVW-t	MT20	6.0	9.0	1.50	3.25
N	BMV1+l	MT20	3.0	5.0	Edge	2.25
O	BMWW-t	MT20	5.0	7.0	2.25	3.50
P	BBWWW-h	MT20	6.0	16.0		
Q	BMWWW-t	MT20	5.0	7.0	2.25	3.50
R	BBWWW-h	MT20	6.0	16.0		
S	BMWW-t	MT20	5.0	7.0	2.25	3.50
T	BMV1+l	MT20	3.0	5.0	Edge	2.25

Edge - INDICATES REFERENCE CORNER OF PLATE TOUCHES EDGE OF CHORD.

LICENSED PROFESSIONAL ENGINEER
G.J. GIBBONS
90461401
PROVINCE OF ONTARIO

23-01-2023

DIMENSIONS, SUPPORTS AND LOADINGS SPECIFIED BY FABRICATOR TO BE VERIFIED BY BUILDING DESIGNER

BEARINGS

JT	FACTORED GROSS REACTION VERT	HORZ	MAXIMUM FACTORED GROSS REACTION DOWN	HORZ	UPLIFT	INPUT BRG IN-SX	REQRD BRG IN-SX
T	2019	0	2019	0	0	5-8	1-14
N	2019	0	2019	0	0	5-8	1-14

ALLOW FOR 1.0" OF HORIZONTAL MOVEMENT DUE TO TOTAL LOAD

UNFACTORED REACTIONS

JT	1ST LCASE COMBINED	SNOW	MAX./MIN. COMPONENT REACTIONS LIVE	PERM.LIVE	WIND	DEAD	SOIL
T	1404	1056 / 0	0 / 0	0 / 0	0 / 0	348 / 0	0 / 0
N	1404	1056 / 0	0 / 0	0 / 0	0 / 0	348 / 0	0 / 0

BEARING MATERIAL TO BE SPF NO.2 OR BETTER AT JOINT(S) T, N

BRACING

TOP CHORD TO BE SHEATHED OR MAX. PURLIN SPACING = 3.13 FT.
MAX. UNBRACED BOTTOM CHORD LENGTH = 10.00 FT OR RIGID CEILING DIRECTLY APPLIED.

ALL PITCH BREAKS AND PERIMETER CORNER JOINTS MUST BE LATERALLY RESTRAINED.

LOADING

TOTAL LOAD CASES: (4)

CHORDS

MEMB. FR-TO	MAX. FACTORED FORCE (LBS)	FACTORED VERT. LOAD (PLF) FROM	TO	LC1	MAX CSI (LC)	MAX. UNBRAC LENGTH
T- B	-1975 / 0	0.0	0.0	0.14 (1)	6.73	
A- B	0 / 50	-129.8	-129.8	0.10 (1)	10.00	
B- C	-4308 / 0	-129.8	-129.8	0.16 (1)	4.12	
C- D	-6984 / 0	-129.8	-129.8	0.38 (1)	3.13	
D- E	-6881 / 0	-129.8	-129.8	0.35 (1)	3.19	
E- F	-6881 / 0	-129.8	-129.8	0.35 (1)	3.19	
F- G	-2294 / 0	-129.8	-129.8	0.18 (1)	5.27	
G- H	-2294 / 0	-129.8	-129.8	0.18 (1)	5.27	
H- I	-6881 / 0	-129.8	-129.8	0.35 (1)	3.19	
I- J	-6881 / 0	-129.8	-129.8	0.35 (1)	3.19	
J- K	-6984 / 0	-129.8	-129.8	0.38 (1)	3.13	
K- L	-4308 / 0	-129.8	-129.8	0.16 (1)	4.12	
L- M	0 / 50	-129.8	-129.8	0.10 (1)	10.00	
N- L	-1975 / 0	0.0	0.0	0.14 (1)	6.73	
T- S	-9 / 0	-18.3	-18.3	0.05 (1)	10.00	
S- R	0 / 4039	-18.3	-18.3	0.53 (1)	10.00	
R- Q	0 / 2809	-18.3	-18.3	0.25 (1)	10.00	
Q- P	0 / 2809	-18.3	-18.3	0.25 (1)	10.00	
P- O	0 / 4039	-18.3	-18.3	0.53 (1)	10.00	
O- N	-9 / 0	-18.3	-18.3	0.05 (1)	10.00	

WEBS

MEMB. FR-TO	MAX. FACTORED FORCE (LBS)	MAX CSI (LC)
Q- G	0 / 2380	0.28 (1)
Q- H	-1493 / 0	0.33 (1)
H- P	0 / 4305	0.50 (1)
P- J	-214 / 0	0.01 (1)
P- K	0 / 2415	0.28 (1)
O- K	-1487 / 0	0.10 (1)
O- L	0 / 3586	0.42 (1)
O- Q	-1493 / 0	0.33 (1)
R- F	0 / 4305	0.50 (1)
R- D	-214 / 0	0.01 (1)
C- R	0 / 2415	0.28 (1)
S- C	-1487 / 0	0.10 (1)
B- S	0 / 3586	0.42 (1)

DESIGN CRITERIA

SPECIFIED LOADS:

TOP CH.	LL	=	38.3	PSF
	DL	=	6.0	PSF
BOT CH.	LL	=	0.0	PSF
	DL	=	7.3	PSF
TOTAL LOAD		=	51.6	PSF

SPACING = 24.0 IN. C/C

THIS TRUSS IS DESIGNED FOR RESIDENTIAL OR SMALL BUILDING REQUIREMENTS OF PART 9, NBCC 2015

THIS DESIGN COMPLIES WITH:
- PART 9 OF BCBC 2018 , NBC-2019AE
- PART 9 OF OBC 2012 (2019 AMENDMENT)
- CSA 086-14
- TPIC 2014

(55 % OF 54.3 P.S.F. G.S.L. PLUS 8.4 P.S.F. RAIN LOAD) EQUALS 38.3 P.S.F. SPECIFIED ROOF LIVE LOAD

ALLOWABLE DEFL.(LL)= L/360 (0.83")
CALCULATED VERT. DEFL.(LL) = L/821 (0.37")
ALLOWABLE DEFL.(TL)= L/360 (0.83")
CALCULATED VERT. DEFL.(TL) = L/482 (0.62")

CSI: TC=0.38/1.00 (C-D:1) , BC=0.53/1.00 (O-P:1) , WB=0.50/1.00 (H-P:1) , SSI=0.20/1.00 (H-J:1)

DOL LUMBER=1.00 NAIL=1.00 LS BEND=1.10 COMP=1.10 SHEAR=1.10 TENS= 1.10

COMPANION LIVE LOAD FACTOR = 1.00

TRUSS PLATE MANUFACTURER IS NOT RESPONSIBLE FOR QUALITY CONTROL IN THE TRUSS MANUFACTURING PLANT .

NAIL VALUES

PLATE	GRIP(DRY) (PSI) MAX	MIN	SHEAR (PLI) MAX	MIN	SECTION (PLI) MAX	MIN
MT20	650	371	1747	788	1987	1873

PLATE PLACEMENT TOL. = 0.250 inches

PLATE ROTATION TOL. = 5.0 Deg.

JSI GRIP= 0.89 (H) (INPUT = 0.90)
JSI METAL= 0.88 (F) (INPUT = 1.00)

phoenix BUILDING COMPONENTS

JOB NAME	TRUSS NAME	QUANTITY	PLY	JOB DESC.	DRWG NO.
C6622-1	GE1	2	1	Letarte Garage -Roof TRUSS DESC.	

Phoenix Building Components, Utopia, On. L0M 1T0, T. Partridge

Version 8.620 S Jan 12 2023 MiTek Industries, Inc. Mon Jan 23 17:04:59 2023 Page 1

ID:LqVJ4ToEFHICNSQepBUntYzu4ET-0z2CKhQkMdsN0PL2ZvD1LdoGVFytlE9Il3?YypzsQVo

0-0-6 2-6-0 4-6-0 5-9-8 6-6-0 8-6-0 10-6-0 12-6-0 14-6-0 16-6-0 18-6-0 19-2-8 20-6-0 22-6-0 24-6-0 25-0-0
6-0 2-0-0 2-0-0 1-3-8 8-8 2-0-0 2-0-0 2-0-0 2-0-0 2-0-0 2-0-0 2-0-0 8-8 1-3-8 2-0-0 2-0-0 6-0

3x5 ||

Scale = 1:58.1

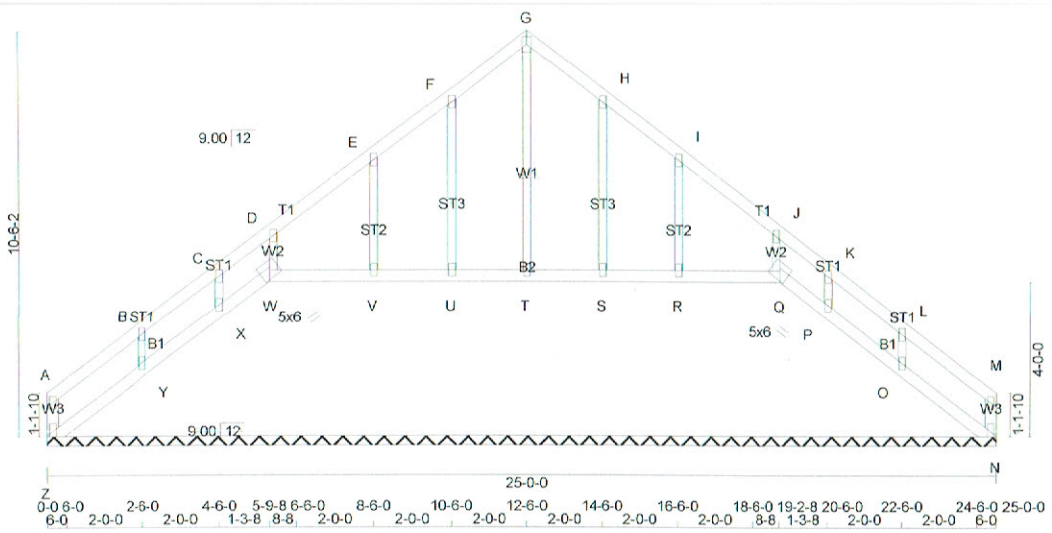

TOTAL WEIGHT = 2 X 91 = 183 lb

LUMBER

N. L. G. A. RULES

CHORDS	SIZE		LUMBER	DESCR.
Z - A	2x4	DRY	1650F 1.5E	SPF
A - G	2x4	DRY	1650F 1.5E	SPF
G - M	2x4	DRY	1650F 1.5E	SPF
N - M	2x4	DRY	1650F 1.5E	SPF
Z - W	2x4	DRY	1650F 1.5E	SPF
W - Q	2x4	DRY	1650F 1.5E	SPF
Q - N	2x4	DRY	1650F 1.5E	SPF
ALL WEBS	2x3	DRY	1650F 1.5E	SPF
ALL GABLE WEBS	2x3	DRY	1650F 1.5E	SPF

DRY: SEASONED LUMBER.

GABLE STUDS SPACED AT 2-0-0 OC.

PLATES (table is in inches)

JT	TYPE	PLATES	W	LEN	Y	X
A	TMV+p	MT20	2.0	4.0		
B, C, D, E, F, H, I, J, K, L						
B	TMW+w	MT20	2.0	4.0		
G	TTW+p	MT20	3.0	5.0		
M	TMV+p	MT20	2.0	4.0		
N	BMV1+p	MT20	2.0	4.0	Edge	
O, P, R, S, T, U, V, X, Y						
O	BMW1+w	MT20	2.0	4.0		
Q	BBW1-h	MT20	5.0	6.0		
W	BBW1-h	MT20	5.0	6.0		
Z	BMV1+p	MT20	2.0	4.0	Edge	

Edge - INDICATES REFERENCE CORNER OF PLATE TOUCHES EDGE OF CHORD.

LICENSED PROFESSIONAL ENGINEER
G.J. GIBBONS
90461401
PROVINCE OF ONTARIO

23-01-2023

DIMENSIONS, SUPPORTS AND LOADINGS SPECIFIED BY FABRICATOR TO BE VERIFIED BY BUILDING DESIGNER

BEARINGS

JT	FACTORED GROSS REACTION VERT	HORZ	MAXIMUM FACTORED GROSS REACTION DOWN	HORZ	UPLIFT	INPUT BRG IN-SX	REQRD BRG IN-SX
Z	184	0	184	0	0	25-0-0 (5-4-0)-8	
N	184	0	184	0	0	25-0-0 (5-4-0)-8	
W	323	0	323	0	0	25-0-0 (5-4-0)-8	
Q	323	0	323	0	0	25-0-0 (5-4-0)-8	
T	336	0	336	0	0	25-0-0 (5-4-0)-8	
U	282	0	282	0	0	25-0-0 (5-4-0)-8	
V	351	0	351	0	0	25-0-0 (5-4-0)-8	
X	198	0	198	0	0	25-0-0 (5-4-0)-8	
Y	344	0	344	0	0	25-0-0 (5-4-0)-8	
S	282	0	282	0	0	25-0-0 (5-4-0)-8	
R	351	0	351	0	0	25-0-0 (5-4-0)-8	
P	198	0	198	0	0	25-0-0 (5-4-0)-8	
O	344	0	344	0	0	25-0-0 (5-4-0)-8	

VALUE IN PARENTHESIS INDICATES EFFECTIVE BEARING LENGTH

BEVELED PLATE OR SHIM REQUIRED TO PROVIDE FULL BEARING SURFACE WITH TRUSS CHORD AT JT(S): T, U, V, S, R

UNFACTORED REACTIONS

JT	1ST LCASE COMBINED	MAX./MIN. COMPONENT REACTIONS SNOW	LIVE	PERM.LIVE	WIND	DEAD	SOIL
Z	128	96 / 0	0 / 0	0 / 0	0 / 0	32 / 0	0 / 0
N	128	96 / 0	0 / 0	0 / 0	0 / 0	32 / 0	0 / 0
W	226	165 / 0	0 / 0	0 / 0	0 / 0	61 / 0	0 / 0
Q	226	165 / 0	0 / 0	0 / 0	0 / 0	61 / 0	0 / 0
T	233	180 / 0	0 / 0	0 / 0	0 / 0	53 / 0	0 / 0
U	196	147 / 0	0 / 0	0 / 0	0 / 0	49 / 0	0 / 0
V	245	180 / 0	0 / 0	0 / 0	0 / 0	65 / 0	0 / 0
X	137	105 / 0	0 / 0	0 / 0	0 / 0	33 / 0	0 / 0
Y	241	175 / 0	0 / 0	0 / 0	0 / 0	66 / 0	0 / 0
S	196	147 / 0	0 / 0	0 / 0	0 / 0	49 / 0	0 / 0
R	245	180 / 0	0 / 0	0 / 0	0 / 0	65 / 0	0 / 0
P	137	105 / 0	0 / 0	0 / 0	0 / 0	33 / 0	0 / 0
O	241	175 / 0	0 / 0	0 / 0	0 / 0	66 / 0	0 / 0

BEARING MATERIAL TO BE SPF NO.2 OR BETTER AT JOINT(S) Z, N, W, Q, T, U, V, X, Y, S, R, P, O

BRACING

TOP CHORD TO BE SHEATHED OR MAX. PURLIN SPACING = 6.25 FT.
MAX. UNBRACED BOTTOM CHORD LENGTH = 6.25 FT. OR RIGID CEILING DIRECTLY APPLIED.

ALL PITCH BREAKS AND PERIMETER CORNER JOINTS MUST BE LATERALLY RESTRAINED.

LOADING

TOTAL LOAD CASES: (4)

CHORDS

MEMB. FR-TO	MAX. FACTORED FORCE (LBS)	FACTORED VERT. LOAD LC1 (PLF) FROM	TO	MAX CSI (LC)	MAX. UNBRAC LENGTH
Z- A	-207 / 0	0.0	0.0	0.06 (1)	7.81
A- B	-86 / 0	-129.8	-129.8	0.07 (1)	6.25
B- C	-38 / 0	-129.8	-129.8	0.07 (1)	6.25
C- D	-3 / 24	-129.8	-129.8	0.07 (1)	10.00
D- E	-6 / 3	-129.8	-129.8	0.07 (1)	10.00
E- F	-6 / 7	-129.8	-129.8	0.07 (1)	10.00
F- G	-4 / 20	-129.8	-129.8	0.05 (1)	10.00
G- H	-4 / 20	-129.8	-129.8	0.05 (1)	10.00
H- I	-6 / 7	-129.8	-129.8	0.07 (1)	10.00
I- J	-6 / 3	-129.8	-129.8	0.07 (1)	10.00
J- K	-3 / 24	-129.8	-129.8	0.07 (1)	10.00

WEBS

MEMB. FR-TO	MAX. FACTORED FORCE (LBS)	MAX CSI (LC)
T- G	-298 / 0	0.15 (1)
Q- J	-289 / 0	0.03 (1)
W- D	-289 / 0	0.03 (1)
U- F	-249 / 0	0.07 (1)
V- E	-305 / 0	0.04 (1)
X- C	-155 / 0	0.01 (1)
Y- B	-276 / 0	0.02 (1)
S- H	-249 / 0	0.07 (1)
R- I	-305 / 0	0.04 (1)
P- K	-155 / 0	0.01 (1)
O- L	-276 / 0	0.02 (1)

DESIGN CRITERIA [M]

SPECIFIED LOADS:

TOP CH.	LL	=	38.3	PSF
	DL	=	6.0	PSF
BOT CH.	LL	=	0.0	PSF
	DL	=	7.3	PSF
TOTAL LOAD		=	51.6	PSF

SPACING = 24.0 IN. C/C

THIS TRUSS IS DESIGNED FOR RESIDENTIAL OR SMALL BUILDING REQUIREMENTS OF PART 9, NBCC 2015

THIS DESIGN COMPLIES WITH:
- PART 9 OF BCBC 2018 , NBC-2019AE
- PART 9 OF OBC 2012 (2019 AMENDMENT)
- CSA 086-14
- TPIC 2014

(55 % OF 54.3 P.S.F. G.S.L. PLUS 8.4 P.S.F. RAIN LOAD) EQUALS 38.3 P.S.F. SPECIFIED ROOF LIVE LOAD

CSI: TC=0.07/1.00 (E-F:1) , BC=0.03/1.00 (N-O:1) , WB=0.15/1.00 (G-T:1) , SSI=0.11/1.00 (D-E:1)

DOL LUMBER=1.00 NAIL=1.00 LS BEND=1.10 COMP=1.10 SHEAR=1.10 TENS= 1.10

COMPANION LIVE LOAD FACTOR = 1.00

TRUSS PLATE MANUFACTURER IS NOT RESPONSIBLE FOR QUALITY CONTROL IN THE TRUSS MANUFACTURING PLANT .

NAIL VALUES

PLATE	GRIP(DRY) (PSI) MAX	MIN	SHEAR (PLI) MAX	MIN	SECTION (PLI) MAX	MIN
MT20	650	371	1747	788	1987	1873

PLATE PLACEMENT TOL. = 0.250 inches

PLATE ROTATION TOL. = 5.0 Deg.

JSI GRIP= 0.44 (G) (INPUT = 0.90)
JSI METAL= 0.16 (E) (INPUT = 1.00)

CONTINUED ON PAGE 2

phoenix
A BUILDING COMPONENTS

JOB NAME	TRUSS NAME	QUANTITY	PLY	JOB DESC.	DRWG NO.
C6622-1	GE1	2	1	Letarte Garage -Roof TRUSS DESC.	

LOADING
TOTAL LOAD CASES: (4)

CHORDS

MEMB. FR-TO	MAX. FACTORED FORCE (LBS)	FACTORED VERT. LOAD (PLF) FROM	TO	LC1	MAX CSI (LC)	MAX. UNBRAC LENGTH
K- L	-38 / 0	-129.8	-129.8	0.07	(1)	6.25
L- M	-86 / 0	-129.8	-129.8	0.07	(1)	6.25
N- M	-207 / 0	0.0	0.0	0.06	(1)	7.81

WEBS

MEMB. FR-TO	MAX. FACTORED FORCE (LBS)	MAX CSI (LC)
Z- Y	0 / 83	-18.3 -18.3 0.03 (1) 10.00
Y- X	0 / 26	-18.3 -18.3 0.02 (4) 10.00
X- W	-5 / 9	-18.3 -18.3 0.02 (4) 10.00
W- V	-2 / 5	-18.3 -18.3 0.02 (4) 10.00
V- U	-11 / 4	-18.2 -18.2 0.02 (4) 6.25
U- T	-15 / 3	-18.2 -18.2 0.01 (4) 6.25
T- S	-15 / 3	-18.2 -18.2 0.01 (4) 6.25
S- R	-11 / 4	-18.2 -18.2 0.02 (4) 6.25
R- Q	-2 / 5	-18.3 -18.3 0.02 (4) 10.00
Q- P	-5 / 9	-18.2 -18.2 0.02 (4) 10.00
P- O	0 / 26	-18.3 -18.3 0.02 (4) 10.00
O- N	0 / 83	-18.3 -18.3 0.03 (1) 10.00

LICENSED PROFESSIONAL ENGINEER
G.J. GIBBONS
90461401
PROVINCE OF ONTARIO

23-01-2023

phoenix

N / NA Nails

MiTek

Proper fasteners are a critical component in a sound wood frame structure. To ensure successful installations of its connectors, MiTek offers a full range of structurally-rated nails. All galvanized nails supplied by MiTek are Hot-dipped for greater corrosion resistance. Any MiTek connector requiring a NA16D-RS or NA20D nail is shipped with the nails attached to the connector in convenient poly bags.

Gun-Nails:

It is permissible to use nail guns to install connectors.

Note:

1. Many nail guns use fasteners smaller than the common nail size specified with MiTek product, factored resistance must be reduced accordingly.
2. Drive through pre-punched nail holes only.
3. Do not over drive.
4. Recommend the use of guns featuring hole-locating mechanisms.

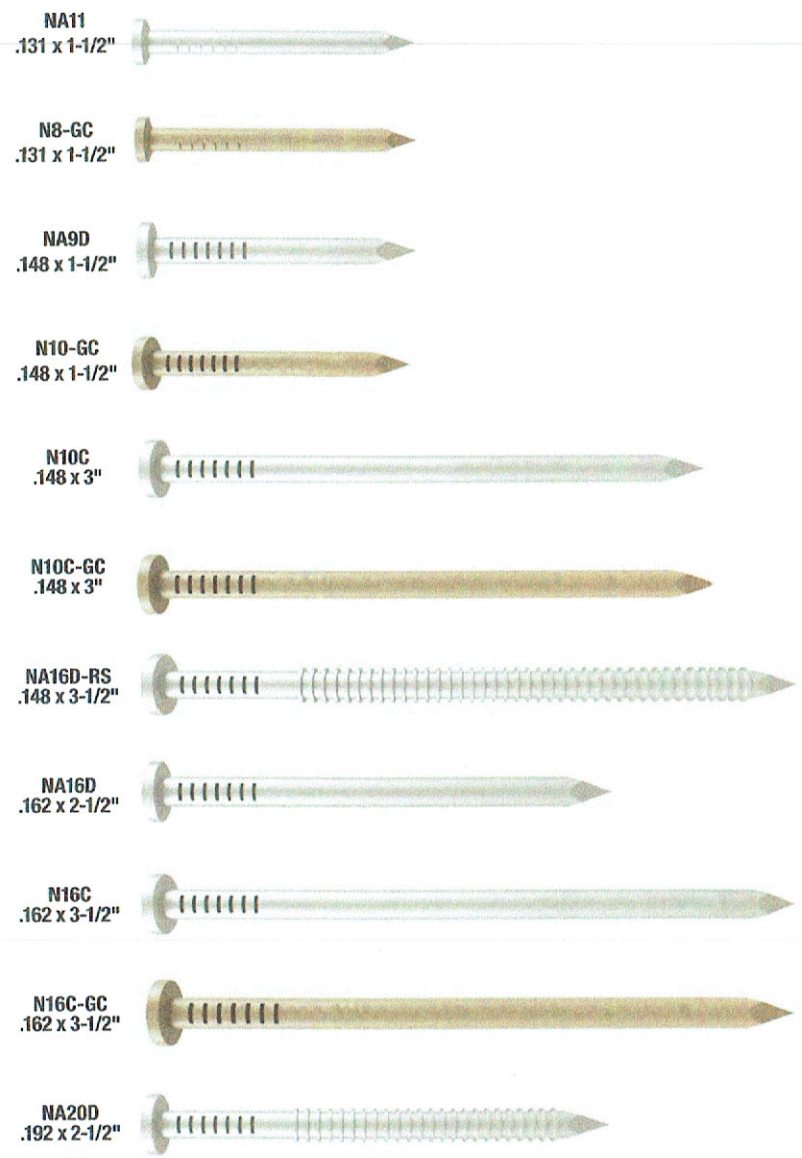

AVAILABLE IN GOLD COAT

Optional Nails for Face Mount Hangers and Straight Straps

(Does not apply to slant nail hangers: HUS, JDS, JH, JPF, JUS, MSH, MUS, THDH)

Catalog Nail	Replacement Fastener	Resistance Adjustment Factor
8d common (0.131" x 2-1/2")	8d spiral (0.110" x 2-1/2")	0.72
	8d x 1-1/2 (0.131" x 1-1/2")	0.97
10d x 1-1/2 (0.148" x 1-1/2")	8d x 1-1/2 (0.131" x 1-1/2")	0.80
10d common (0.148" x 3") 12d common (0.148" x 3-1/4")	8d x 1-1/2 (0.131" x 1-1/2")	0.80
	8d common (0.131" x 2-1/2")	0.80
	10d spiral (0.122" x 3")	0.70
	10d x 1-1/2 (0.148" x 1-1/2")	0.90
16d common (0.161" x 3-1/2")	8d common (0.131" x 2-1/2")	0.67
	10d common (0.148" x 3")	0.85
	12d common (0.148" x 3-1/4")	0.85
	10d spiral (0.122" x 3")	0.59
	12d spiral (0.122" x 3-1/4")	0.59
	16d spiral (0.152" x 3-1/2")	0.89
	10d x 1-1/2 (0.148" x 1-1/2")	0.78
	16d x 2-1/2 (0.162" x 2-1/2")	1.00

1. This chart does not apply to custom hangers or hangers modified to skew and/or slope.
2. This chart applies to metal side member of 10Ga or thinner. For steel thicker than 10Ga, contact MiTek for exceptions.
3. Resistance adjustment factor is the multiplier to the published factored resistance when a nail of different size and/or type is used in lieu of a Specified Nail.
4. Roofing nails shall not be substituted for any nail size or type.
5. Decking nails are not to be used as a substitution for any load carrying nails.

Continued on next page

Copyright © 2018 MiTek Industries, Inc. All Rights Reserved

N / NA Nails

MiTek

Fasteners

Nail Specification Table

Finish	Size (in)	MiTek Stock No.	Ref. No.	Metric (mm) Dia	Metric (mm) Length	Unit	D.Fir-L Factored Shear Resistance per Nail (K_D = 1.00) Steel Side Plate 10 Ga	12 Ga	14 Ga	16 Ga	18 Ga	20 Ga	S-P-F Factored Shear Resistance per Nail (K_D = 1.00) Steel Side Plate 10 Ga	12 Ga	14 Ga	16 Ga	18 Ga	20 Ga
HDG	8d (0.131) x 1-1/2	NA11	N8	3.33	38.1	Lbs	215	215	197	178	163	150	188	188	182	163	148	135
						kN	0.96	0.96	0.88	0.79	0.73	0.67	0.84	0.84	0.81	0.73	0.66	0.60
	10d (0.148) x 1-1/2	NA9D	N10	3.76	38.1	Lbs	269	263	222	200	184	169	236	236	205	183	167	152
						kN	1.20	1.17	0.99	0.89	0.82	0.75	1.05	1.05	0.91	0.81	0.74	0.68
	10d (0.148) x 3	N10C	10DHDG	3.76	76.2	Lbs	269	269	241	218	201	185	236	236	224	201	184	168
						kN	1.20	1.20	1.07	0.97	0.89	0.82	1.05	1.05	1.00	0.89	0.82	0.75
	16d (0.162) x 2-1/2	NA16D	N16, N16EG	4.11	63.5	Lbs	317	317	275	250	231	214	278	278	255	230	211	194
						kN	1.41	1.41	1.22	1.11	1.03	0.95	1.24	1.24	1.13	1.02	0.94	0.86
	16d (0.162) x 3-1/2	N16C	16DHDG	4.11	88.9	Lbs	317	317	275	250	231	214	278	278	255	230	211	194
						kN	1.41	1.41	1.22	1.11	1.03	0.95	1.24	1.24	1.13	1.02	0.94	0.86
	20d (0.192) x 2-1/2	NA20D	--	4.88	63.5	Lbs	429	408	353	323	300	280	376	376	326	296	274	253
						kN	1.91	1.81	1.57	1.44	1.33	1.25	1.67	1.67	1.45	1.32	1.22	1.13
GC	8d (0.131) x 1-1/2	N8-GC	--	3.33	38.1	Lbs	215	215	197	178	163	150	188	188	182	163	148	135
						kN	0.96	0.96	0.88	0.79	0.73	0.67	0.84	0.84	0.81	0.73	0.66	0.60
	10d (0.148) x 1-1/2	N10-GC	--	3.76	38.1	Lbs	269	263	222	200	184	169	236	236	205	183	167	152
						kN	1.20	1.17	0.99	0.89	0.82	0.75	1.05	1.05	0.91	0.81	0.74	0.68
	10d (0.148) x 3	N10C-GC	--	3.76	76.2	Lbs	269	169	241	218	201	185	236	236	224	201	184	168
						kN	1.20	0.75	1.07	0.97	0.89	0.82	1.05	1.05	1.00	0.89	0.82	0.75
	16d (0.162) x 3-1/2	N16C-GC	--	4.11	88.9	Lbs	317	317	275	250	231	214	278	278	255	230	211	194
						kN	1.41	1.41	1.22	1.11	1.03	0.95	1.24	1.24	1.13	1.02	0.94	0.86
SS	8d (0.131) x 1-1/2	SSNA8D	SSN8	3.33	38.1	Lbs	215	215	197	178	163	150	188	188	182	163	148	135
						kN	0.96	0.96	0.88	0.79	0.73	0.67	0.84	0.84	0.81	0.73	0.66	0.60
	10d (0.148) x 1-1/2	SSNA10D	SSN10	3.76	38.1	Lbs	269	263	222	200	184	169	236	236	205	183	167	152
						kN	1.20	1.17	0.99	0.89	0.82	0.75	1.05	1.05	0.91	0.81	0.74	0.68
	8d (0.131) x 2-1/2	SSN8C	SS8D	3.33	63.5	Lbs	215	215	202	181	166	152	188	188	188	168	153	139
						kN	0.96	0.96	0.90	0.81	0.74	0.68	0.84	0.84	0.84	0.75	0.68	0.62
	10d (0.148) x 3	SSN10C	SS10D	3.76	76.2	Lbs	269	269	241	218	201	185	236	236	224	201	184	168
						kN	1.20	1.20	1.07	0.97	0.89	0.82	1.05	1.05	1.00	0.89	0.82	0.75
	16d (0.162) x 3-1/2	SSN16C	SS16D	3.76	82.6	Lbs	317	317	275	250	231	214	278	278	255	230	211	194
						kN	1.41	1.41	1.22	1.11	1.03	0.95	1.24	1.24	1.13	1.02	0.94	0.86
Bright	8d (0.131) x 2-1/2	8d Common	--	3.33	63.5	Lbs	215	215	202	181	166	152	188	188	188	168	153	139
						kN	0.96	0.96	0.90	0.81	0.74	0.68	0.84	0.84	0.84	0.75	0.68	0.62
	10d (0.148) x 3	10d Common	--	3.76	76.2	Lbs	269	269	241	218	201	185	236	236	224	201	184	168
						kN	1.20	1.20	1.07	0.97	0.89	0.82	1.05	1.05	1.00	0.89	0.82	0.75
	16d (0.148) x 3-1/4	16d Sinker	--	3.76	82.6	Lbs	269	269	241	218	201	185	236	236	224	201	184	168
						kN	1.20	1.20	1.07	0.97	0.89	0.82	1.05	1.05	1.00	0.89	0.82	0.75
	16d (0.148) x 3-1/2 Ring Shank	NA16D-RS	--	3.76	88.9	Lbs	269	269	241	218	201	185	236	236	224	201	184	168
						kN	1.20	1.20	1.07	0.97	0.89	0.82	1.05	1.05	1.00	0.89	0.82	0.75
	16d (0.162) x 3-1/2	16d Common	--	4.11	88.9	Lbs	317	317	275	250	231	214	278	278	255	230	211	194
						kN	1.41	1.41	1.22	1.11	1.03	0.95	1.24	1.24	1.13	1.02	0.94	0.86
	20d (0.192) x 4	20d Common	--	4.88	101.6	Lbs	429	408	353	323	300	280	376	376	326	296	274	253
						kN	1.91	1.81	1.57	1.44	1.33	1.25	1.67	1.67	1.45	1.32	1.22	1.13
	8d (0.110) x 2-1/2 Spiral Shank	2-1/2" Common Spiral	--	2.77	63.5	Lbs	155	155	155	139	127	115	136	136	136	130	117	105
						kN	0.69	0.69	0.69	0.62	0.56	0.51	0.60	0.60	0.60	0.58	0.52	0.47
	10d (0.122) x 3 Spiral Shank	3" Common Spiral	--	3.1	76.2	Lbs	188	188	182	163	149	136	165	165	165	151	137	124
						kN	0.84	0.84	0.81	0.73	0.66	0.60	0.73	0.73	0.73	0.67	0.61	0.55
	12d (0.122) x 3-1/4 Spiral Shank	3-1/4" Common Spiral	--	3.1	82.6	Lbs	188	188	182	163	149	136	165	165	165	151	137	124
						kN	0.84	0.84	0.81	0.73	0.66	0.60	0.73	0.73	0.73	0.67	0.61	0.55
	16d (0.152) x 3-1/2 Spiral Shank	3-1/2" Common Spiral	--	3.86	88.9	Lbs	282	282	250	227	209	193	248	248	233	209	192	175
						kN	1.25	1.25	1.11	1.01	0.93	0.86	1.10	1.10	1.04	0.93	0.85	0.78

1) Factored shear resistance values determined in accordance with CSA O86-14 Clause 12.9; apply modification factors K_D, K_{SF} and K_T where applicable.
2) Factored shear resistances assume full nail penetration into the main member.
3) Tabulated factored shear resistances assume a side plate tensile strength of 45 ksi (310 MPa).
4) HDG = Hot-Dip Galvanized; SS = Stainless Steel; GC = Gold Coat; Bright = No Finish.
5) Bright finish common, sinker, and spiral nails are listed for reference only. MiTek does not stock these type nails.

Copyright © 2018 MiTek Industries, Inc. All Rights Reserved

Continued on next page

N / NA Nails

MiTek

Round Holes:
Always fill all (normal-size) round nail holes, unless otherwise noted.

Diamond Holes:
Optional nailing for maximum listed capacity or for temporary hanger fastening during installation.

When there are **MIN** and **MAX** values:
MIN: fill all round nail holes
MAX: fill all round and diamond holes

Large Round Holes:
For concrete/masonry installation; no need to be filled when connected to wood.

Obround Holes:
For ease of nailing at a tight location; always fill.

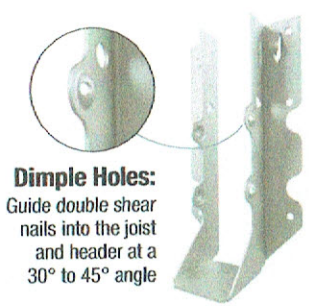

Dimple Holes:
Guide double shear nails into the joist and header at a 30° to 45° angle

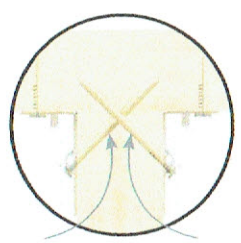

Use specified standard length common nails. 16d common and 10d common nails are 3-1/2" and 3" long respectively.

Typical I-Joist Nailing

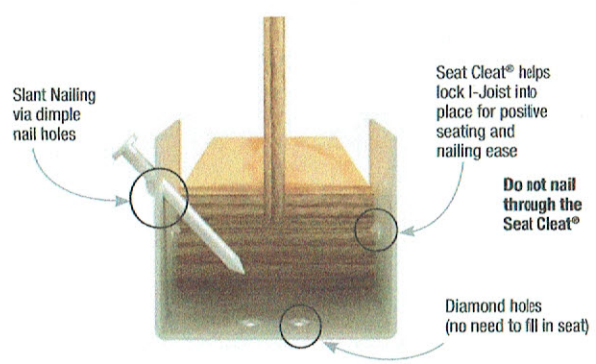

Common Nailing Errors

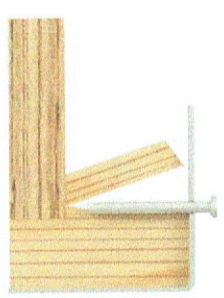

Wrong Angle
When a nail is driven into the bottom flange of the wood I-Joist parallel to the glue lines, separation of veneers can occur which substantially reduces the design loads of the connection.

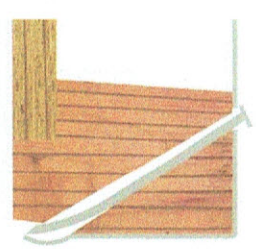

Nail Too Long
When using nails longer than MiTek's recommended nails, bottom flange splitting may occur. Also, this can raise the wood I-Joist off the seat, resulting in uneven surfaces and squeaky floors along with reduced factored resistance.

Copyright © 2018 MiTek Industries, Inc. All Rights Reserved

INSTALL BEFORE TRUSS

This roof system includes TC or STC scissor truss clips, which must be installed before the truss is installed

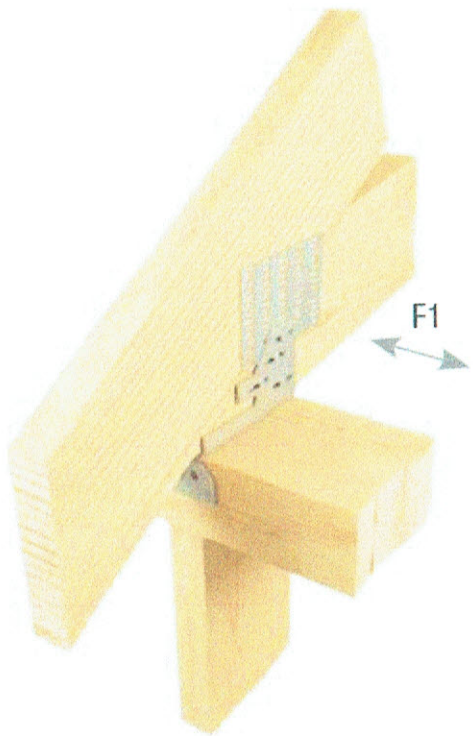

Typical STC installation

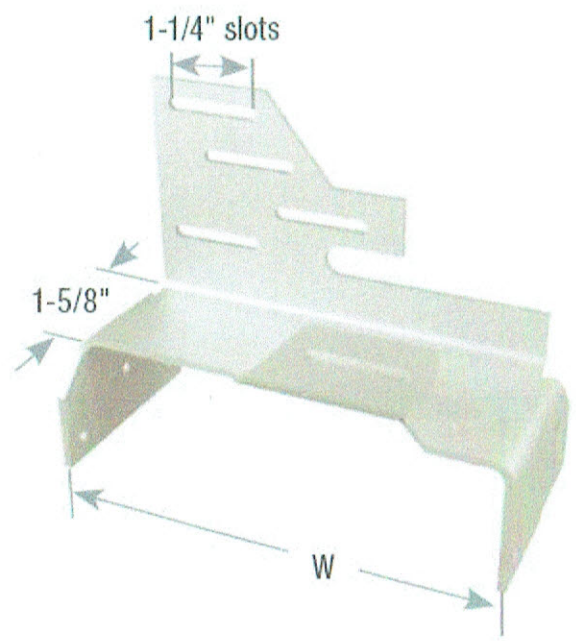

STC

TC

Truss Connector

The TC truss connector is an ideal connector for scissor trusses and can allow horizontal movement up to 1¼". The TC also attaches plated trusses to top plates or sill plates to resist uplift forces. Typically used on one or both ends of truss as determined by the Designer.

Material: 16 gauge

Finish: Galvanized

Installation:

- Use all specified fasteners; see General Notes.
- Drive 10d nails into the truss at the inside end of the slotted holes (inside end is towards the center of the truss and clinch on back side). Do not seat these nails into the truss — allow room under the nail head for movement of the truss with respect to the wall.
- After installation of roofing materials nails may be required to be fully seated into the truss. (As required by the Designer or Truss Designer.)

Optional TC Installation:

- Bend one flange up 90°. Drive specified nails into the top and face of the top plates or install Titen® screws into the top and face of masonry wall. See optional load tables and installation details.

Codes: See p. 14 for Code Reference Key Chart

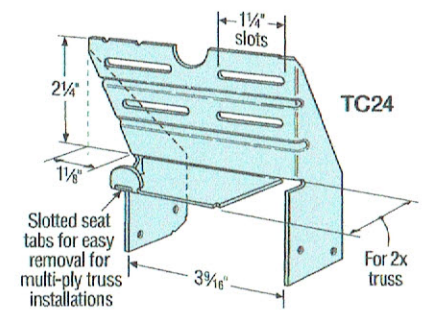

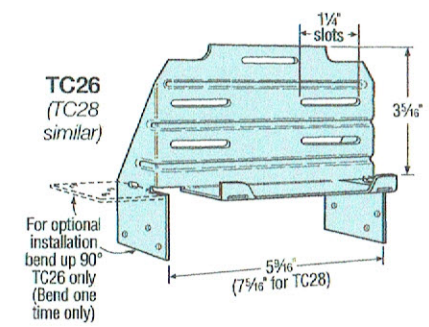

Model No.	Fasteners		DF/SP Allowable Loads	SPF/HF Allowable Loads	Code Ref.
	Truss	Plate	Uplift (160)	Uplift (160)	
TC24	(4) 10d	(4) 10d	400	345	I13, FL
TC26	(5) 10d	(6) 10d	665	570	
TC28	(5) 10d	(6) 10d	665	570	

See footnotes below.

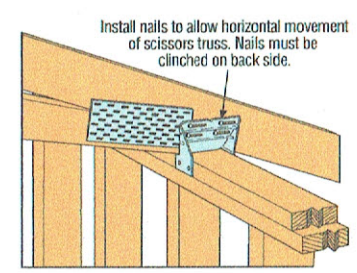

Typical TC24 Installation

Optional TC Installation Table

Model No.	Fasteners		DF/SP Allowable Loads	SPF/HF Allowable Loads	Masonry Allowable Loads	Code Ref.
	Truss	Plate	Uplift (160)	Uplift (160)	Uplift (160)	
TC26	(5) 10d x 1½"	(6) 10d x 1½"	430	350	—	I13, FL
	(5) 10d	(6) 10d	450	390	—	
	(5) 10d	(6) ⅜" x 2¼" Titen	—	—	195	

1. Loads have been increased for wind or earthquake loading with no further increase allowed; reduce where other loads govern.
2. Grout strength is 2,000 psi minimum.
3. Nail values based on single 2x truss. 10d joist nails must be clinched.
4. Optional TC26 installation with 10d nails requires minimum 3" top plate thickness.
5. **Nails:** 10d = 0.148" dia. x 3" long, 10d x 1½" = 0.148" dia. x 1½" long. See pp. 26–27 for other nail sizes and information.

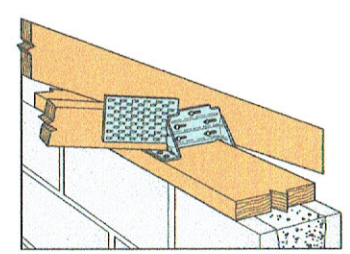

Optional TC26 Installation for Grouted Concrete Block using a Wood Nailer
(8", 10", 12" wall installation similar)

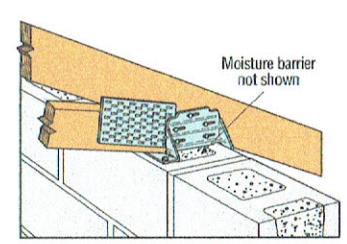

Optional TC26 Installation for Grouted Concrete Block using Titen Screws

C-C-2017 ©2017 SIMPSON STRONG-TIE COMPANY INC.

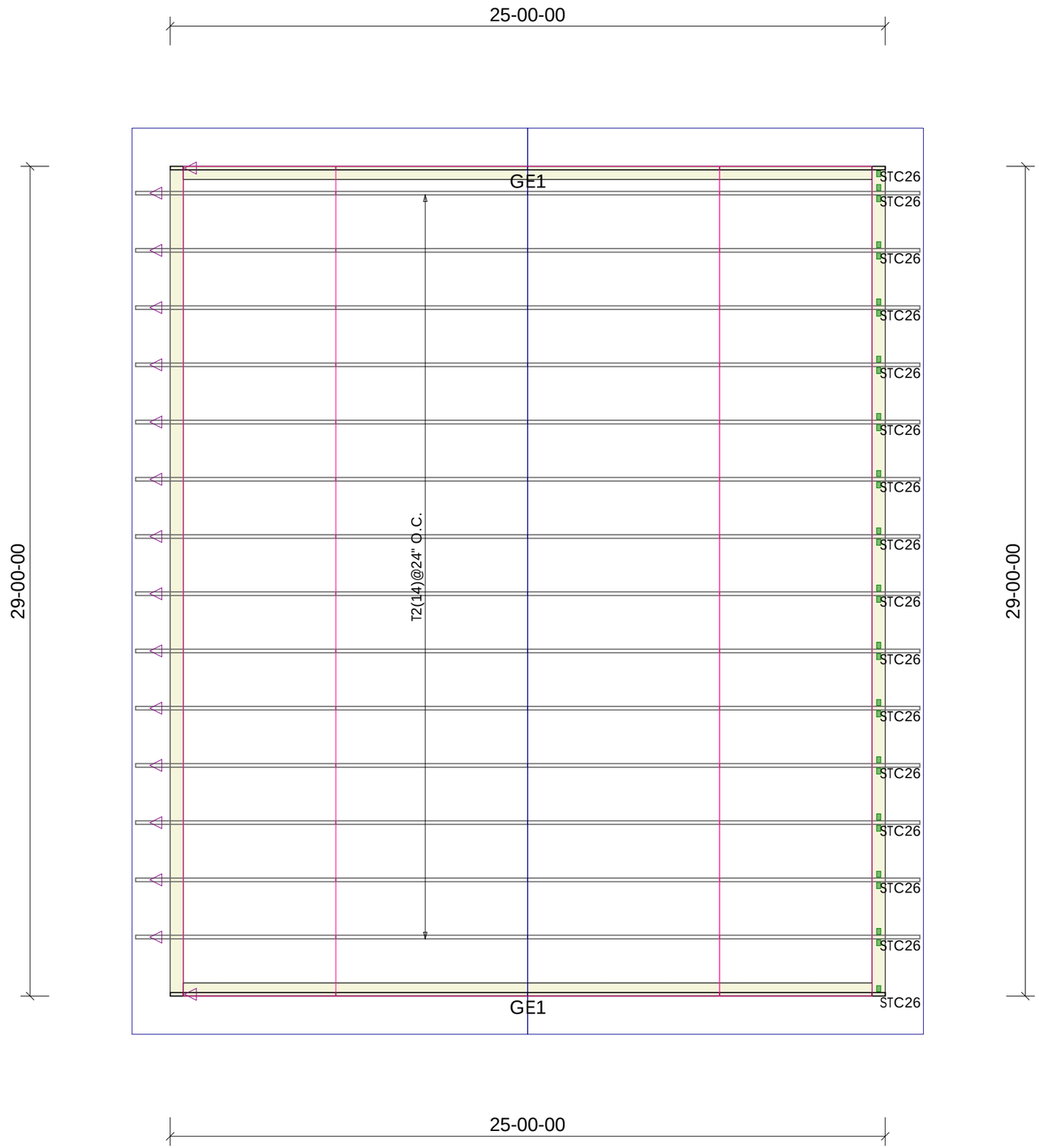

Truss Connector Total List		
Manuf	Product	Qty
MiTek	STC26	16

JOB INFO:		LAYOUT INFO:		DESIGN INFO:		
JOB#:	C6622	PITCH:	9/12	CODE:	OBC 2012,	Residential - HSB (NBCC Part 9)
TAG:	Letarte Garage	HEEL:	18"	GSL	54.3 lb/ft²	
DEALER:	C.O.D. - Tom	OVERHANG:	16" from stud	T.C.D.L.	6.0 lb/ft²	
DESIGNER:	Dylan Chin-a-loy	SPACING:	24" o.c.	B.C.L.L.	0.0 lb/ft²	
DATE:	1/23/2023			B.C.D.L.	7.3 lb/ft²	

NOTES:

APPROXIMATE ROOF AREA: 1095.14 SQFT

◁ Truss left end indicator corresponding to individual truss drawings. Ensure trusses are not installed in reverse.

STOP

DO NOT INSTALL IMPROPERLY FITTING TRUSSES.
CONTACT PHOENIX BUILDING COMPONENTS.
DO NOT CUT, MODIFY, OR REPAIR COMPONENTS WITHOUT CONSULTING PHOENIX BUILDING COMPONENTS 1-888-262-2524

LVL BY GLOBAL LVL INC., 2.0E-3300Fb CCMC# 13543

I-JOISTS BY ANTHONY EACOM, INC. CCMC# 13053-R ONTARIO MINISTER'S RULING #07-16-174

phoenix BUILDING COMPONENTS

R1

JOB NAME	TRUSS NAME	QUANTITY	PLY	JOB DESC.	DRWG NO.
C6622-1	T2	14	1	Letarte Garage -Roof TRUSS DESC.	

Phoenix Building Components, Utopia, On. L0M 1T0, T. Partridge

Version 8.620 S Jan 12 2023 MiTek Industries, Inc. Mon Jan 23 17:04:55 2023 Page 1

ID:LqVJ4ToEFHICNSQepBUntYzu4ET-7CphUKNEIPMxXo2HK385BndWheTEpMeirR1Lp2zsQVs

Scale = 1:67.6

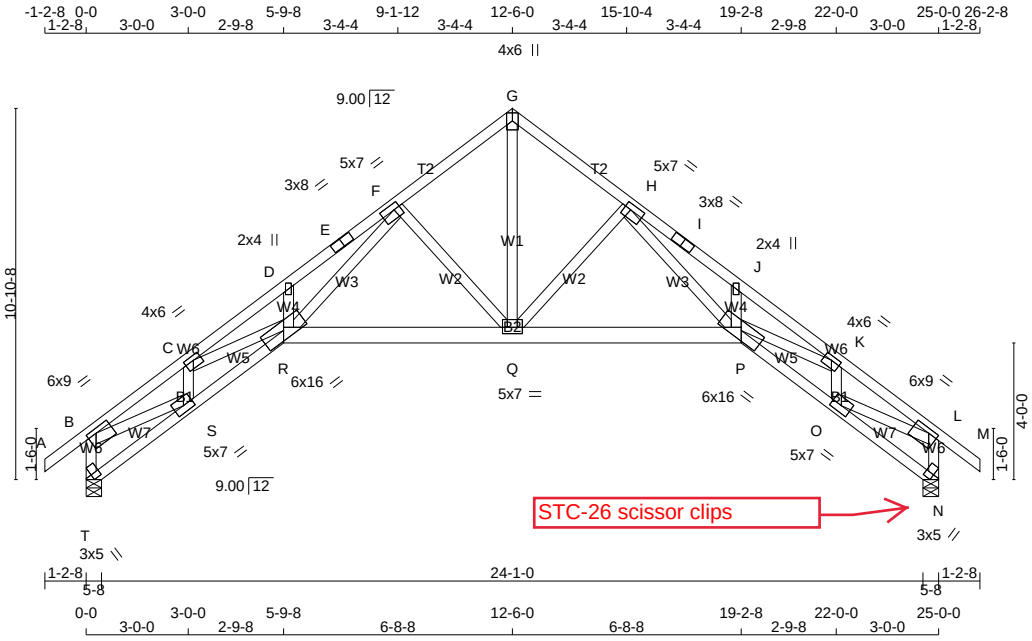

TOTAL WEIGHT = 14 X 131 = 1831 lb

[M][F]

LUMBER

N. L. G. A. RULES

CHORDS	SIZE		LUMBER	DESCR.
T - B	2x4	DRY	1650F 1.5E	SPF
A - E	2x4	DRY	2100F 1.8E	SPF
E - G	2x4	DRY	2100F 1.8E	SPF
G - I	2x4	DRY	2100F 1.8E	SPF
I - M	2x4	DRY	2100F 1.8E	SPF
N - L	2x4	DRY	1650F 1.5E	SPF
T - R	2x4	DRY	1650F 1.5E	SPF
R - P	2x6	DRY	1650F 1.5E	SPF
P - N	2x4	DRY	1650F 1.5E	SPF
ALL WEBS	2x4	DRY	1650F 1.5E	SPF

DRY: SEASONED LUMBER.

PLATES (table is in inches)

JT	TYPE	PLATES	W	LEN	Y	X
B	TMVW-t	MT20	6.0	9.0	1.50	3.25
C	TMWW-t	MT20	4.0	6.0	1.50	2.75
D	TMW+w	MT20	2.0	4.0		
E	TS-t	MT20	3.0	8.0		
F	TMWW-t	MT20	5.0	7.0	2.00	2.25
G	TTW+p	MT20	4.0	6.0	Edge	
H	TMWW-t	MT20	5.0	7.0	2.00	2.25
I	TS-t	MT20	3.0	8.0		
J	TMW+w	MT20	2.0	4.0		
K	TMWW-t	MT20	4.0	6.0	1.50	2.75
L	TMVW-t	MT20	6.0	9.0	1.50	3.25
N	BMV1+l	MT20	3.0	5.0	Edge	2.25
O	BMWW-t	MT20	5.0	7.0	2.25	3.50
P	BBWWW-h	MT20	6.0	16.0		
Q	BMWWW-t	MT20	5.0	7.0	2.25	3.50
R	BBWWW-h	MT20	6.0	16.0		
S	BMWW-t	MT20	5.0	7.0	2.25	3.50
T	BMV1+l	MT20	3.0	5.0	Edge	2.25

Edge - INDICATES REFERENCE CORNER OF PLATE TOUCHES EDGE OF CHORD.

DIMENSIONS, SUPPORTS AND LOADINGS SPECIFIED BY FABRICATOR TO BE VERIFIED BY BUILDING DESIGNER

BEARINGS

JT	FACTORED GROSS REACTION VERT	HORZ	MAXIMUM FACTORED GROSS REACTION DOWN	HORZ	UPLIFT	INPUT BRG IN-SX	REQRD BRG IN-SX
T	2019	0	2019	0	0	5-8	1-14
N	2019	0	2019	0	0	5-8	1-14

ALLOW FOR 1.0" OF HORIZONTAL MOVEMENT DUE TO TOTAL LOAD

UNFACTORED REACTIONS

1ST LCASE MAX./MIN. COMPONENT REACTIONS

JT	COMBINED	SNOW	LIVE	PERM.LIVE	WIND	DEAD	SOIL
T	1404	1056 / 0	0 / 0	0 / 0	0 / 0	348 / 0	0 / 0
N	1404	1056 / 0	0 / 0	0 / 0	0 / 0	348 / 0	0 / 0

BEARING MATERIAL TO BE SPF NO.2 OR BETTER AT JOINT(S) T, N

BRACING

TOP CHORD TO BE SHEATHED OR MAX. PURLIN SPACING = 3.13 FT.
MAX. UNBRACED BOTTOM CHORD LENGTH = 10.00 FT OR RIGID CEILING DIRECTLY APPLIED.

ALL PITCH BREAKS AND PERIMETER CORNER JOINTS MUST BE LATERALLY RESTRAINED.

LOADING

TOTAL LOAD CASES: (4)

CHORDS

MEMB. FR-TO	MAX. FACTORED FORCE (LBS)	FACTORED VERT. LOAD (PLF) FROM	TO	LC1 MAX CSI (LC)	MAX. UNBRAC LENGTH
T- B	-1975 / 0	0.0	0.0	0.14 (1)	6.73
A- B	0 / 50	-129.8	-129.8	0.10 (1)	10.00
B- C	-4308 / 0	-129.8	-129.8	0.16 (1)	4.12
C- D	-6984 / 0	-129.8	-129.8	0.38 (1)	3.13
D- E	-6881 / 0	-129.8	-129.8	0.35 (1)	3.19
E- F	-6881 / 0	-129.8	-129.8	0.35 (1)	3.19
F- G	-2294 / 0	-129.8	-129.8	0.18 (1)	5.27
G- H	-2294 / 0	-129.8	-129.8	0.18 (1)	5.27
H- I	-6881 / 0	-129.8	-129.8	0.35 (1)	3.19
I- J	-6881 / 0	-129.8	-129.8	0.35 (1)	3.19
J- K	-6984 / 0	-129.8	-129.8	0.38 (1)	3.13
K- L	-4308 / 0	-129.8	-129.8	0.16 (1)	4.12
L- M	0 / 50	-129.8	-129.8	0.10 (1)	10.00
N- L	-1975 / 0	0.0	0.0	0.14 (1)	6.73
T- S	-9 / 0	-18.3	-18.3	0.06 (1)	10.00
S- R	0 / 4039	-18.3	-18.3	0.53 (1)	10.00
R- Q	0 / 2809	-18.3	-18.3	0.25 (1)	10.00
Q- P	0 / 2809	-18.3	-18.3	0.25 (1)	10.00
P- O	0 / 4039	-18.3	-18.3	0.53 (1)	10.00
O- N	-9 / 0	-18.3	-18.3	0.06 (1)	10.00

WEBS

MEMB. FR-TO	MAX. FACTORED FORCE (LBS)	MAX CSI (LC)
Q- G	0 / 2380	0.28 (1)
Q- H	-1493 / 0	0.33 (1)
H- P	0 / 4305	0.50 (1)
P- J	-214 / 0	0.01 (1)
P- K	0 / 2415	0.28 (1)
O- K	-1487 / 0	0.10 (1)
O- L	0 / 3586	0.42 (1)
F- Q	-1493 / 0	0.33 (1)
R- F	0 / 4305	0.50 (1)
R- D	-214 / 0	0.01 (1)
C- R	0 / 2415	0.28 (1)
S- C	-1487 / 0	0.10 (1)
B- S	0 / 3586	0.42 (1)

DESIGN CRITERIA

SPECIFIED LOADS:

TOP CH.	LL	=	38.3	PSF
	DL	=	6.0	PSF
BOT CH.	LL	=	0.0	PSF
	DL	=	7.3	PSF
TOTAL LOAD		=	51.6	PSF

SPACING = 24.0 IN. C/C

THIS TRUSS IS DESIGNED FOR RESIDENTIAL OR SMALL BUILDING REQUIREMENTS OF PART 9, NBCC 2015

THIS DESIGN COMPLIES WITH:
- PART 9 OF BCBC 2018 , NBC-2019AE
- PART 9 OF OBC 2012 (2019 AMENDMENT)
- CSA 086-14
- TPIC 2014

(55 % OF 54.3 P.S.F. G.S.L. PLUS 8.4 P.S.F. RAIN LOAD) EQUALS 38.3 P.S.F. SPECIFIED ROOF LIVE LOAD

ALLOWABLE DEFL.(LL)= L/360 (0.83")
CALCULATED VERT. DEFL.(LL) = L/ 821 (0.37")
ALLOWABLE DEFL.(TL)= L/360 (0.83")
CALCULATED VERT. DEFL.(TL) = L/ 482 (0.62")

CSI: TC=0.38/1.00 (C-D:1) , BC=0.53/1.00 (O-P:1) , WB=0.50/1.00 (H-P:1) , SSI=0.20/1.00 (H-J:1)

DOL LUMBER=1.00 NAIL=1.00 LS BEND=1.10 COMP=1.10 SHEAR=1.10 TENS= 1.10

COMPANION LIVE LOAD FACTOR = 1.00

TRUSS PLATE MANUFACTURER IS NOT RESPONSIBLE FOR QUALITY CONTROL IN THE TRUSS MANUFACTURING PLANT .

NAIL VALUES

PLATE	GRIP(DRY) (PSI) MAX	MIN	SHEAR (PLI) MAX	MIN	SECTION (PLI) MAX	MIN
MT20	650	371	1747	788	1987	1873

PLATE PLACEMENT TOL. = 0.250 inches

PLATE ROTATION TOL. = 5.0 Deg.

JSI GRIP= 0.89 (H) (INPUT = 0.90)
JSI METAL= 0.88 (F) (INPUT = 1.00)

23-01-2023

phoenix BUILDING COMPONENTS

JOB NAME	TRUSS NAME	QUANTITY	PLY	JOB DESC.	DRWG NO.
C6622-1	GE1	2	1	Letarte Garage -Roof TRUSS DESC.	

Phoenix Building Components, Utopia, On. L0M 1T0, T. Partridge

Version 8.620 S Jan 12 2023 MiTek Industries, Inc. Mon Jan 23 17:04:59 2023 Page 1

ID:LqVJ4ToEFHICNSQepBUntYzu4ET-0z2CKhQkMdsN0PL2ZvD1LdoGVFytlE9Il3?YypzsQVo

Scale = 1:58.1

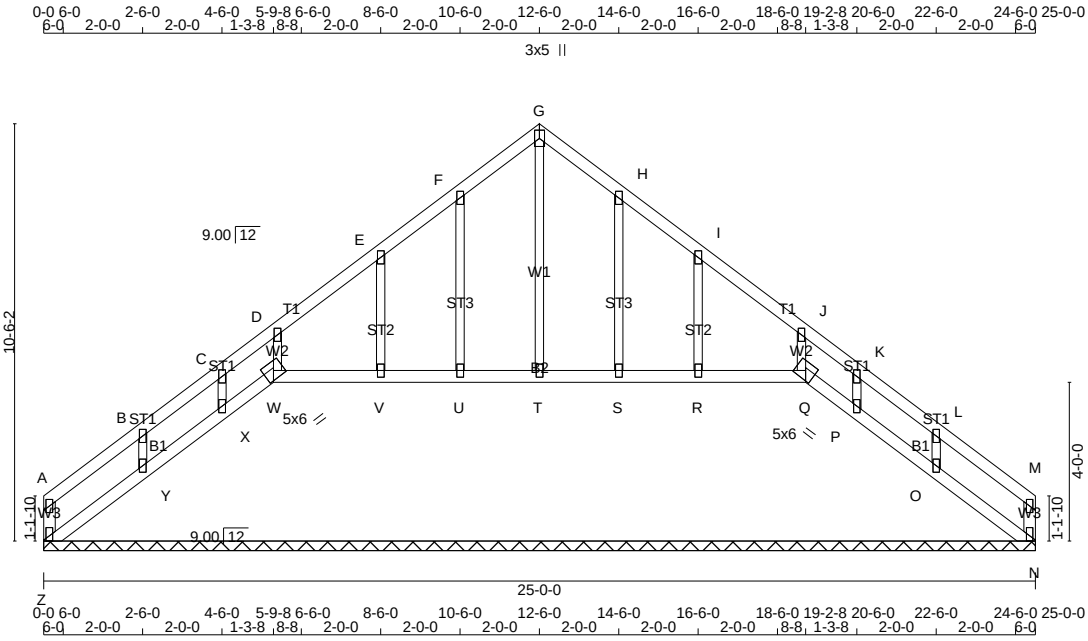

TOTAL WEIGHT = 2 X 91 = 183 lb

[M]

LUMBER

N. L. G. A. RULES

CHORDS	SIZE		LUMBER	DESCR.
Z - A	2x4	DRY	1650F 1.5E	SPF
A - G	2x4	DRY	1650F 1.5E	SPF
G - M	2x4	DRY	1650F 1.5E	SPF
N - M	2x4	DRY	1650F 1.5E	SPF
Z - W	2x4	DRY	1650F 1.5E	SPF
W - Q	2x4	DRY	1650F 1.5E	SPF
Q - N	2x4	DRY	1650F 1.5E	SPF
ALL WEBS	2x3	DRY	1650F 1.5E	SPF
ALL GABLE WEBS	2x3	DRY	1650F 1.5E	SPF

DRY: SEASONED LUMBER.

GABLE STUDS SPACED AT 2-0-0 OC.

PLATES (table is in inches)

JT	TYPE	PLATES	W	LEN	Y	X
A	TMV+p	MT20	2.0	4.0		
B, C, D, E, F, H, I, J, K, L						
B	TMW+w	MT20	2.0	4.0		
G	TTW+p	MT20	3.0	5.0		
M	TMV+p	MT20	2.0	4.0		
N	BMV1+p	MT20	2.0	4.0	Edge	
O, P, R, S, T, U, V, X, Y						
O	BMW1+w	MT20	2.0	4.0		
Q	BBW1-h	MT20	5.0	6.0		
W	BBW1-h	MT20	5.0	6.0		
Z	BMV1+p	MT20	2.0	4.0	Edge	

Edge - INDICATES REFERENCE CORNER OF PLATE TOUCHES EDGE OF CHORD.

DIMENSIONS, SUPPORTS AND LOADINGS SPECIFIED BY FABRICATOR TO BE VERIFIED BY BUILDING DESIGNER

BEARINGS

JT	FACTORED GROSS REACTION VERT	HORZ	MAXIMUM GROSS REACTION DOWN	HORZ	FACTORED UPLIFT	INPUT BRG IN-SX	REQRD BRG IN-SX
Z	184	0	184	0	0	25-0-0 (5-4-0)	1-8
N	184	0	184	0	0	25-0-0 (5-4-0)	1-8
W	323	0	323	0	0	25-0-0 (5-4-0)	1-8
Q	323	0	323	0	0	25-0-0 (5-4-0)	1-8
T	336	0	336	0	0	25-0-0 (5-4-0)	1-8
U	282	0	282	0	0	25-0-0 (5-4-0)	1-8
V	351	0	351	0	0	25-0-0 (5-4-0)	1-8
X	198	0	198	0	0	25-0-0 (5-4-0)	1-8
Y	344	0	344	0	0	25-0-0 (5-4-0)	1-8
S	282	0	282	0	0	25-0-0 (5-4-0)	1-8
R	351	0	351	0	0	25-0-0 (5-4-0)	1-8
P	198	0	198	0	0	25-0-0 (5-4-0)	1-8
O	344	0	344	0	0	25-0-0 (5-4-0)	1-8

VALUE IN PARENTHESIS INDICATES EFFECTIVE BEARING LENGTH

BEVELED PLATE OR SHIM REQUIRED TO PROVIDE FULL BEARING SURFACE WITH TRUSS CHORD AT JT(S): T , U , V , S , R

UNFACTORED REACTIONS

JT	1ST LCASE COMBINED	SNOW	MAX./MIN. COMPONENT REACTIONS LIVE	PERM.LIVE	WIND	DEAD	SOIL
Z	128	96 / 0	0 / 0	0 / 0	0 / 0	32 / 0	0 / 0
N	128	96 / 0	0 / 0	0 / 0	0 / 0	32 / 0	0 / 0
W	226	165 / 0	0 / 0	0 / 0	0 / 0	61 / 0	0 / 0
Q	226	165 / 0	0 / 0	0 / 0	0 / 0	61 / 0	0 / 0
T	233	180 / 0	0 / 0	0 / 0	0 / 0	53 / 0	0 / 0
U	196	147 / 0	0 / 0	0 / 0	0 / 0	49 / 0	0 / 0
V	245	180 / 0	0 / 0	0 / 0	0 / 0	65 / 0	0 / 0
X	137	105 / 0	0 / 0	0 / 0	0 / 0	33 / 0	0 / 0
Y	241	175 / 0	0 / 0	0 / 0	0 / 0	66 / 0	0 / 0
S	196	147 / 0	0 / 0	0 / 0	0 / 0	49 / 0	0 / 0
R	245	180 / 0	0 / 0	0 / 0	0 / 0	65 / 0	0 / 0
P	137	105 / 0	0 / 0	0 / 0	0 / 0	33 / 0	0 / 0
O	241	175 / 0	0 / 0	0 / 0	0 / 0	66 / 0	0 / 0

BEARING MATERIAL TO BE SPF NO.2 OR BETTER AT JOINT(S) Z, N, W, Q, T, U, V, X, Y, S, R, P, O

BRACING

TOP CHORD TO BE SHEATHED OR MAX. PURLIN SPACING = 6.25 FT.
MAX. UNBRACED BOTTOM CHORD LENGTH = 6.25 FT OR RIGID CEILING DIRECTLY APPLIED.

ALL PITCH BREAKS AND PERIMETER CORNER JOINTS MUST BE LATERALLY RESTRAINED.

LOADING

TOTAL LOAD CASES: (4)

CHORDS

MEMB. FR-TO	MAX. FACTORED FORCE (LBS)	FACTORED VERT. LOAD LC1 (PLF) FROM	TO	MAX CSI (LC)	MAX. UNBRAC LENGTH
Z- A	-207 / 0	0.0	0.0	0.06 (1)	7.81
A- B	-86 / 0	-129.8	-129.8	0.07 (1)	6.25
B- C	-38 / 0	-129.8	-129.8	0.07 (1)	6.25
C- D	-3 / 24	-129.8	-129.8	0.07 (1)	10.00
D- E	-6 / 3	-129.8	-129.8	0.07 (1)	10.00
E- F	-6 / 7	-129.8	-129.8	0.07 (1)	10.00
F- G	-4 / 20	-129.8	-129.8	0.05 (1)	10.00
G- H	-4 / 20	-129.8	-129.8	0.05 (1)	10.00
H- I	-6 / 7	-129.8	-129.8	0.07 (1)	10.00
I- J	-6 / 3	-129.8	-129.8	0.07 (1)	10.00
J- K	-3 / 24	-129.8	-129.8	0.07 (1)	10.00

WEBS

MEMB. FR-TO	MAX. FACTORED FORCE (LBS)	MAX CSI (LC)
T- G	-298 / 0	0.15 (1)
Q- J	-289 / 0	0.03 (1)
W- D	-289 / 0	0.03 (1)
U- F	-249 / 0	0.07 (1)
V- E	-305 / 0	0.04 (1)
X- C	-155 / 0	0.01 (1)
Y- B	-276 / 0	0.02 (1)
S- H	-249 / 0	0.07 (1)
R- I	-305 / 0	0.04 (1)
P- K	-155 / 0	0.01 (1)
O- L	-276 / 0	0.02 (1)

DESIGN CRITERIA

SPECIFIED LOADS:

TOP CH.	LL	=	38.3	PSF
	DL	=	6.0	PSF
BOT CH.	LL	=	0.0	PSF
	DL	=	7.3	PSF
TOTAL LOAD		=	51.6	PSF

SPACING = 24.0 IN. C/C

THIS TRUSS IS DESIGNED FOR RESIDENTIAL OR SMALL BUILDING REQUIREMENTS OF PART 9, NBCC 2015

THIS DESIGN COMPLIES WITH:
- PART 9 OF BCBC 2018 , NBC-2019AE
- PART 9 OF OBC 2012 (2019 AMENDMENT)
- CSA 086-14
- TPIC 2014

(55 % OF 54.3 P.S.F. G.S.L. PLUS 8.4 P.S.F. RAIN LOAD) EQUALS 38.3 P.S.F. SPECIFIED ROOF LIVE LOAD

CSI: TC=0.07/1.00 (E-F:1) , BC=0.03/1.00 (N-O:1) , WB=0.15/1.00 (G-T:1) , SSI=0.11/1.00 (D-E:1)

DOL LUMBER=1.00 NAIL=1.00 LS BEND=1.10 COMP=1.10 SHEAR=1.10 TENS= 1.10

COMPANION LIVE LOAD FACTOR = 1.00

TRUSS PLATE MANUFACTURER IS NOT RESPONSIBLE FOR QUALITY CONTROL IN THE TRUSS MANUFACTURING PLANT .

NAIL VALUES

PLATE	GRIP(DRY) (PSI) MAX	MIN	SHEAR (PLI) MAX	MIN	SECTION (PLI) MAX	MIN
MT20	650	371	1747	788	1987	1873

PLATE PLACEMENT TOL. = 0.250 inches

PLATE ROTATION TOL. = 5.0 Deg.

JSI GRIP= 0.44 (G) (INPUT = 0.90)
JSI METAL= 0.16 (E) (INPUT = 1.00)

CONTINUED ON PAGE 2

LICENSED PROFESSIONAL ENGINEER
G.J. GIBBONS
90461401
PROVINCE OF ONTARIO

23-01-2023

phoenix BUILDING COMPONENTS

LOADING

TOTAL LOAD CASES: (4)

CHORDS MEMB. FR-TO	MAX. FACTORED FORCE (LBS)	FACTORED VERT. LOAD LC1 (PLF) FROM	TO	MAX CSI (LC)	MAX. UNBRAC LENGTH
K- L	-38 / 0	-129.8	-129.8	0.07 (1)	6.25
L- M	-86 / 0	-129.8	-129.8	0.07 (1)	6.25
N- M	-207 / 0	0.0	0.0	0.06 (1)	7.81

WEBS MEMB. FR-TO	MAX. FACTORED FORCE (LBS)	MAX CSI (LC)
Z- Y	0 / 83	0.03 (1)
Y- X	0 / 26	0.02 (4)
X- W	-5 / 9	0.02 (4)
W- V	-2 / 5	0.02 (4)
V- U	-11 / 4	0.02 (4)
U- T	-15 / 3	0.01 (4)
T- S	-15 / 3	0.01 (4)
S- R	-11 / 4	0.02 (4)
R- Q	-2 / 5	0.02 (4)
Q- P	-5 / 9	0.02 (4)
P- O	0 / 26	0.02 (4)
O- N	0 / 83	0.03 (1)

23-01-2023

N / NA Nails

Proper fasteners are a critical component in a sound wood frame structure. To ensure successful installations of its connectors, MiTek offers a full range of structurally-rated nails. All galvanized nails supplied by MiTek are Hot-dipped for greater corrosion resistance. Any MiTek connector requiring a NA16D-RS or NA20D nail is shipped with the nails attached to the connector in convenient poly bags.

Gun-Nails:

It is permissible to use nail guns to install connectors.

Note:

1. Many nail guns use fasteners smaller than the common nail size specified with MiTek product, factored resistance must be reduced accordingly.
2. Drive through pre-punched nail holes only.
3. Do not over drive.
4. Recommend the use of guns featuring hole-locating mechanisms.

AVAILABLE IN GOLD COAT

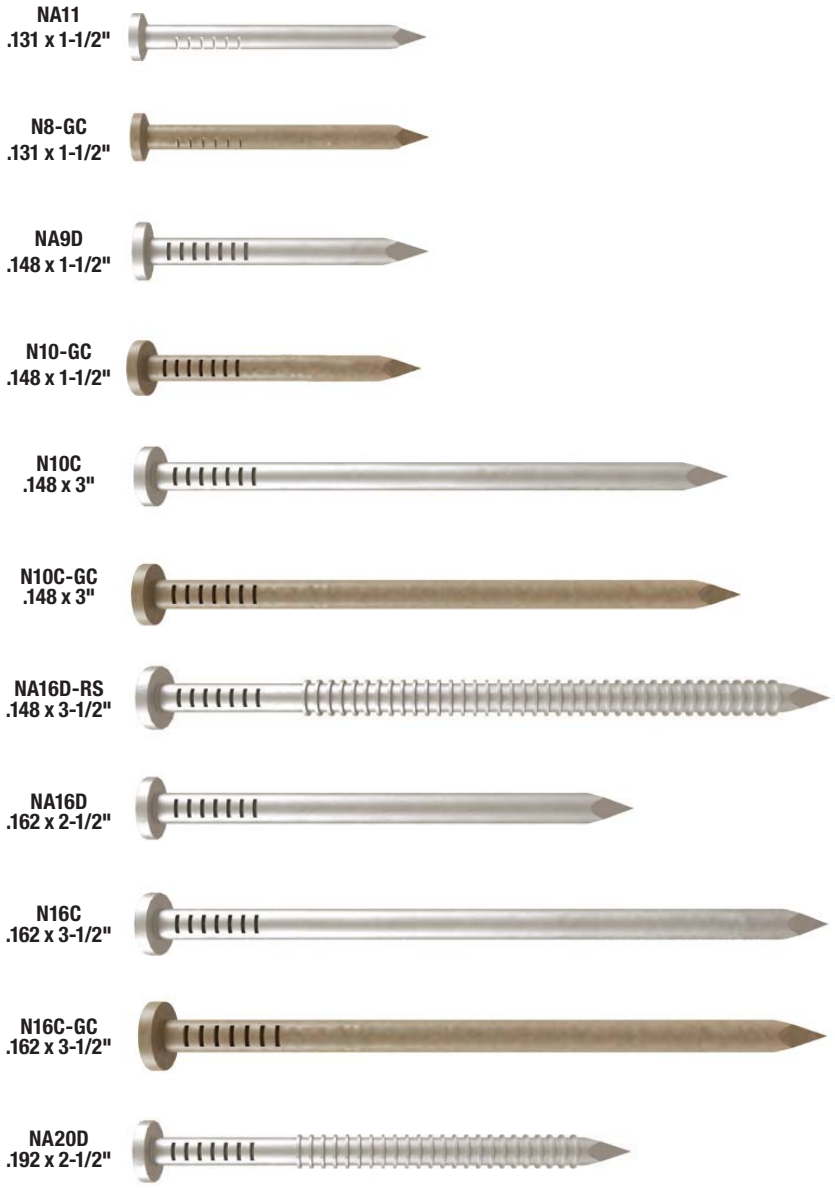

Optional Nails for Face Mount Hangers and Straight Straps

(Does not apply to slant nail hangers: HUS, JDS, JH, JPF, JUS, MSH, MUS, THDH)

Catalog Nail	Replacement Fastener	Resistance Adjustment Factor
8d common (0.131" x 2-1/2")	8d spiral (0.110" x 2-1/2")	0.72
	8d x 1-1/2 (0.131" x 1-1/2")	0.97
10d x 1-1/2 (0.148" x 1-1/2")	8d x 1-1/2 (0.131" x 1-1/2")	0.80
10d common (0.148" x 3") 12d common (0.148" x 3-1/4")	8d x 1-1/2 (0.131" x 1-1/2")	0.80
	8d common (0.131" x 2-1/2")	0.80
	10d spiral (0.122" x 3")	0.70
	10d x 1-1/2 (0.148" x 1-1/2")	0.90
16d common (0.161" x 3-1/2")	8d common (0.131" x 2-1/2")	0.67
	10d common (0.148" x 3")	0.85
	12d common (0.148" x 3-1/4")	0.85
	10d spiral (0.122" x 3")	0.59
	12d spiral (0.122" x 3-1/4")	0.59
	16d spiral (0.152" x 3-1/2")	0.89
	10d x 1-1/2 (0.148" x 1-1/2")	0.78
	16d x 2-1/2 (0.162" x 2-1/2")	1.00

1. This chart does not apply to custom hangers or hangers modified to skew and/or slope.
2. This chart applies to metal side member of 10Ga or thinner. For steel thicker than 10Ga, contact MiTek for exceptions.
3. Resistance adjustment factor is the multiplier to the published factored resistance when a nail of different size and/or type is used in lieu of a Specified Nail.
4. Roofing nails shall not be substituted for any nail size or type.
5. Decking nails are not to be used as a substitution for any load carrying nails.

Copyright © 2018 MiTek Industries, Inc. All Rights Reserved

Continued on next page

MiTek

Nail Specification Table

Finish	Size (in)	MiTek Stock No.	Ref. No.	Metric (mm) Dia	Metric (mm) Length	Unit	D.Fir-L Factored Shear Resistance per Nail (K_D = 1.00) Steel Side Plate 10 Ga	12 Ga	14 Ga	16 Ga	18 Ga	20 Ga	S-P-F Factored Shear Resistance per Nail (K_D = 1.00) Steel Side Plate 10 Ga	12 Ga	14 Ga	16 Ga	18 Ga	20 Ga
HDG	8d (0.131) x 1-1/2	NA11	N8	3.33	38.1	Lbs	215	215	197	178	163	150	188	188	182	163	148	135
						kN	0.96	0.96	0.88	0.79	0.73	0.67	0.84	0.84	0.81	0.73	0.66	0.60
	10d (0.148) x 1-1/2	NA9D	N10	3.76	38.1	Lbs	269	263	222	200	184	169	236	236	205	183	167	152
						kN	1.20	1.17	0.99	0.89	0.82	0.75	1.05	1.05	0.91	0.81	0.74	0.68
	10d (0.148) x 3	N10C	10DHDG	3.76	76.2	Lbs	269	269	241	218	201	185	236	236	224	201	184	168
						kN	1.20	1.20	1.07	0.97	0.89	0.82	1.05	1.05	1.00	0.89	0.82	0.75
	16d (0.162) x 2-1/2	NA16D	N16, N16EG	4.11	63.5	Lbs	317	317	275	250	231	214	278	278	255	230	211	194
						kN	1.41	1.41	1.22	1.11	1.03	0.95	1.24	1.24	1.13	1.02	0.94	0.86
	16d (0.162) x 3-1/2	N16C	16DHDG	4.11	88.9	Lbs	317	317	275	250	231	214	278	278	255	230	211	194
						kN	1.41	1.41	1.22	1.11	1.03	0.95	1.24	1.24	1.13	1.02	0.94	0.86
	20d (0.192) x 2-1/2	NA20D	--	4.88	63.5	Lbs	429	408	353	323	300	280	376	376	326	296	274	253
						kN	1.91	1.81	1.57	1.44	1.33	1.25	1.67	1.67	1.45	1.32	1.22	1.13
GC	8d (0.131) x 1-1/2	N8-GC	--	3.33	38.1	Lbs	215	215	197	178	163	150	188	188	182	163	148	135
						kN	0.96	0.96	0.88	0.79	0.73	0.67	0.84	0.84	0.81	0.73	0.66	0.60
	10d (0.148) x 1-1/2	N10-GC	--	3.76	38.1	Lbs	269	263	222	200	184	169	236	236	205	183	167	152
						kN	1.20	1.17	0.99	0.89	0.82	0.75	1.05	1.05	0.91	0.81	0.74	0.68
	10d (0.148) x 3	N10C-GC	--	3.76	76.2	Lbs	269	169	241	218	201	185	236	236	224	201	184	168
						kN	1.20	0.75	1.07	0.97	0.89	0.82	1.05	1.05	1.00	0.89	0.82	0.75
	16d (0.162) x 3-1/2	N16C-GC	--	4.11	88.9	Lbs	317	317	275	250	231	214	278	278	255	230	211	194
						kN	1.41	1.41	1.22	1.11	1.03	0.95	1.24	1.24	1.13	1.02	0.94	0.86
SS	8d (0.131) x 1-1/2	SSNA8D	SSN8	3.33	38.1	Lbs	215	215	197	178	163	150	188	188	182	163	148	135
						kN	0.96	0.96	0.88	0.79	0.73	0.67	0.84	0.84	0.81	0.73	0.66	0.60
	10d (0.148) x 1-1/2	SSNA10D	SSN10	3.76	38.1	Lbs	269	263	222	200	184	169	236	236	205	183	167	152
						kN	1.20	1.17	0.99	0.89	0.82	0.75	1.05	1.05	0.91	0.81	0.74	0.68
	8d (0.131) x 2-1/2	SSN8C	SS8D	3.33	63.5	Lbs	215	215	202	181	166	152	188	188	188	168	153	139
						kN	0.96	0.96	0.90	0.81	0.74	0.68	0.84	0.84	0.84	0.75	0.68	0.62
	10d (0.148) x 3	SSN10C	SS10D	3.76	76.2	Lbs	269	269	241	218	201	185	236	236	224	201	184	168
						kN	1.20	1.20	1.07	0.97	0.89	0.82	1.05	1.05	1.00	0.89	0.82	0.75
	16d (0.162) x 3-1/2	SSN16C	SS16D	3.76	82.6	Lbs	317	317	275	250	231	214	278	278	255	230	211	194
						kN	1.41	1.41	1.22	1.11	1.03	0.95	1.24	1.24	1.13	1.02	0.94	0.86
Bright	8d (0.131) x 2-1/2	8d Common	--	3.33	63.5	Lbs	215	215	202	181	166	152	188	188	188	168	153	139
						kN	0.96	0.96	0.90	0.81	0.74	0.68	0.84	0.84	0.84	0.75	0.68	0.62
	10d (0.148) x 3	10d Common	--	3.76	76.2	Lbs	269	269	241	218	201	185	236	236	224	201	184	168
						kN	1.20	1.20	1.07	0.97	0.89	0.82	1.05	1.05	1.00	0.89	0.82	0.75
	16d (0.148) x 3-1/4	16d Sinker	--	3.76	82.6	Lbs	269	269	241	218	201	185	236	236	224	201	184	168
						kN	1.20	1.20	1.07	0.97	0.89	0.82	1.05	1.05	1.00	0.89	0.82	0.75
	16d (0.148) x 3-1/2 Ring Shank	NA16D-RS	--	3.76	88.9	Lbs	269	269	241	218	201	185	236	236	224	201	184	168
						kN	1.20	1.20	1.07	0.97	0.89	0.82	1.05	1.05	1.00	0.89	0.82	0.75
	16d (0.162) x 3-1/2	16d Common	--	4.11	88.9	Lbs	317	317	275	250	231	214	278	278	255	230	211	194
						kN	1.41	1.41	1.22	1.11	1.03	0.95	1.24	1.24	1.13	1.02	0.94	0.86
	20d (0.192) x 4	20d Common	--	4.88	101.6	Lbs	429	408	353	323	300	280	376	376	326	296	274	253
						kN	1.91	1.81	1.57	1.44	1.33	1.25	1.67	1.67	1.45	1.32	1.22	1.13
	8d (0.110) x 2-1/2 Spiral Shank	2-1/2" Common Spiral	--	2.77	63.5	Lbs	155	155	155	139	127	115	136	136	136	130	117	105
						kN	0.69	0.69	0.69	0.62	0.56	0.51	0.60	0.60	0.60	0.58	0.52	0.47
	10d (0.122) x 3 Spiral Shank	3" Common Spiral	--	3.1	76.2	Lbs	188	188	182	163	149	136	165	165	165	151	137	124
						kN	0.84	0.84	0.81	0.73	0.66	0.60	0.73	0.73	0.73	0.67	0.61	0.55
	12d (0.122) x 3-1/4 Spiral Shank	3-1/4" Common Spiral	--	3.1	82.6	Lbs	188	188	182	163	149	136	165	165	165	151	137	124
						kN	0.84	0.84	0.81	0.73	0.66	0.60	0.73	0.73	0.73	0.67	0.61	0.55
	16d (0.152) x 3-1/2 Spiral Shank	3-1/2" Common Spiral	--	3.86	88.9	Lbs	282	282	250	227	209	193	248	248	233	209	192	175
						kN	1.25	1.25	1.11	1.01	0.93	0.86	1.10	1.10	1.04	0.93	0.85	0.78

1) Factored shear resistance values determined in accordance with CSA O86-14 Clause 12.9; apply modification factors K_D, K_{SF} and K_T where applicable.
2) Factored shear resistances assume full nail penetration into the main member.
3) Tabulated factored shear resistances assume a side plate tensile strength of 45 ksi (310 MPa).
4) HDG = Hot-Dip Galvanized; SS = Stainless Steel; GC = Gold Coat; Bright = No Finish.
5) Bright finish common, sinker, and spiral nails are listed for reference only. MiTek does not stock these type nails.

Copyright © 2018 MiTek Industries, Inc. All Rights Reserved

Continued on next page

N / NA Nails

Round Holes:
Always fill all (normal-size) round nail holes, unless otherwise noted.

Diamond Holes:
Optional nailing for maximum listed capacity or for temporary hanger fastening during installation.

When there are **MIN** and **MAX** values:
MIN: fill all round nail holes
MAX: fill all round and diamond holes

Large Round Holes:
For concrete/masonry installation; no need to be filled when connected to wood.

Obround Holes:
For ease of nailing at a tight location; always fill.

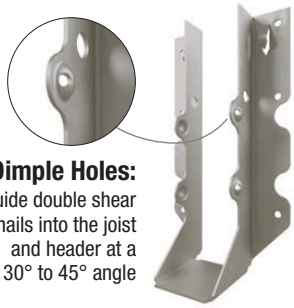

Dimple Holes:
Guide double shear nails into the joist and header at a 30° to 45° angle

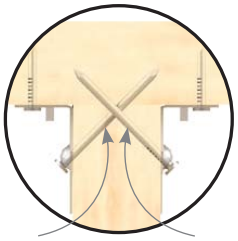

Use specified standard length common nails. 16d common and 10d common nails are 3-1/2" and 3" long respectively.

Typical I-Joist Nailing

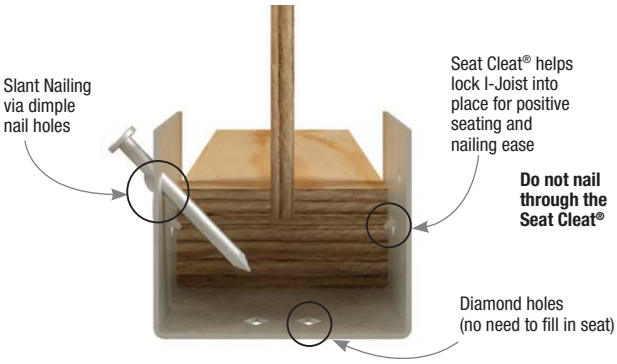

Common Nailing Errors

Wrong Angle
When a nail is driven into the bottom flange of the wood I-Joist parallel to the glue lines, separation of veneers can occur which substantially reduces the design loads of the connection.

Nail Too Long
When using nails longer than MiTek's recommended nails, bottom flange splitting may occur. Also, this can raise the wood I-Joist off the seat, resulting in uneven surfaces and squeaky floors along with reduced factored resistance.

Copyright © 2018 MiTek Industries, Inc. All Rights Reserved

INSTALL BEFORE TRUSS

This roof system includes TC or STC scissor truss clips, which must be installed before the truss is installed

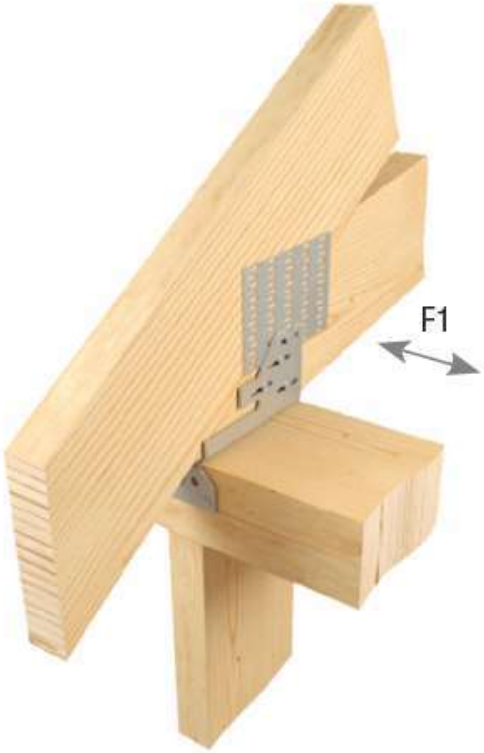

Typical STC installation

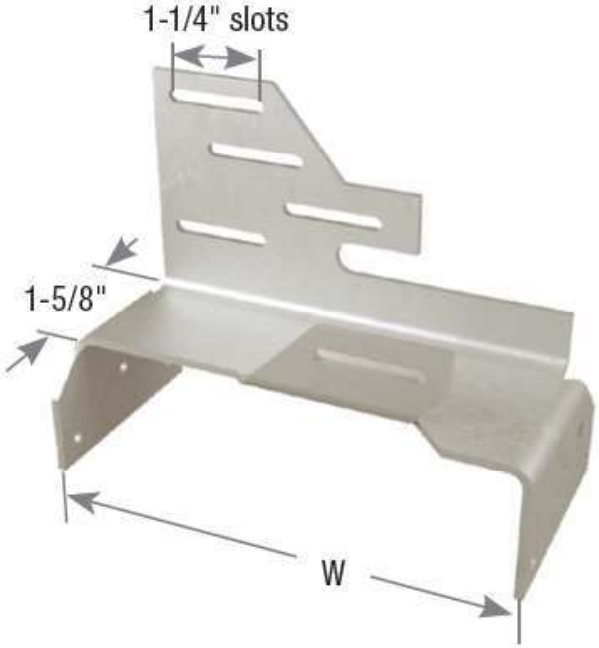

STC

Truss Connector

The TC truss connector is an ideal connector for scissor trusses and can allow horizontal movement up to 1¼". The TC also attaches plated trusses to top plates or sill plates to resist uplift forces. Typically used on one or both ends of truss as determined by the Designer.

Material: 16 gauge

Finish: Galvanized

Installation:

- Use all specified fasteners; see General Notes.
- Drive 10d nails into the truss at the inside end of the slotted holes (inside end is towards the center of the truss and clinch on back side). Do not seat these nails into the truss — allow room under the nail head for movement of the truss with respect to the wall.
- After installation of roofing materials nails may be required to be fully seated into the truss. (As required by the Designer or Truss Designer.)

Optional TC Installation:

- Bend one flange up 90°. Drive specified nails into the top and face of the top plates or install Titen® screws into the top and face of masonry wall. See optional load tables and installation details.

Codes: See p. 14 for Code Reference Key Chart

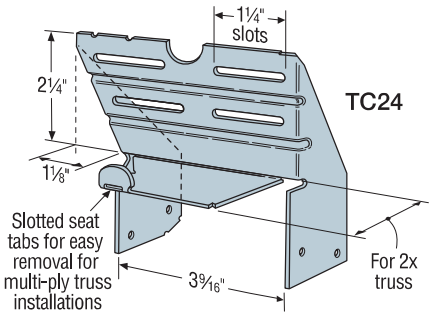

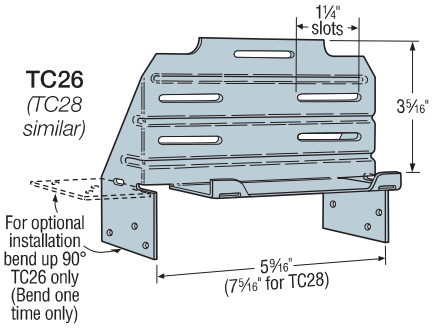

Model No.	Fasteners		DF/SP Allowable Loads	SPF/HF Allowable Loads	Code Ref.
	Truss	Plate	Uplift (160)	Uplift (160)	
TC24	(4) 10d	(4) 10d	400	345	I13, FL
TC26	(5) 10d	(6) 10d	665	570	
TC28	(5) 10d	(6) 10d	665	570	

See footnotes below.

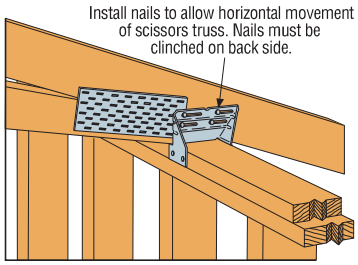

Typical TC24 Installation

Optional TC Installation Table

Model No.	Fasteners		DF/SP Allowable Loads	SPF/HF Allowable Loads	Masonry Allowable Loads	Code Ref.
	Truss	Plate	Uplift (160)	Uplift (160)	Uplift (160)	
TC26	(5) 10d x 1½"	(6) 10d x 1½"	430	350	—	I13, FL
	(5) 10d	(6) 10d	450	390	—	
	(5) 10d	(6) ⁹⁄₁₆ x 2¼" Titen	—	—	195	

1. Loads have been increased for wind or earthquake loading with no further increase allowed; reduce where other loads govern.
2. Grout strength is 2,000 psi minimum.
3. Nail values based on single 2x truss. 10d joist nails must be clinched.
4. Optional TC26 installation with 10d nails requires minimum 3" top plate thickness.
5. **Nails:** 10d = 0.148" dia. x 3" long, 10d x 1½" = 0.148" dia. x 1½" long. See pp. 26–27 for other nail sizes and information.

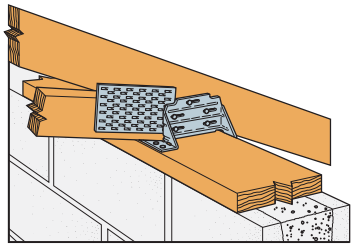

Optional TC26 Installation for Grouted Concrete Block using a Wood Nailer
(8", 10", 12" wall installation similar)

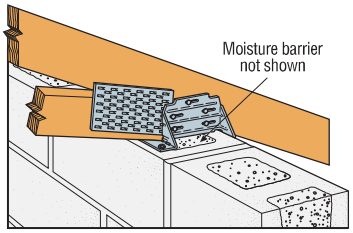

Optional TC26 Installation for Grouted Concrete Block using Titen Screws

C-C-2017 ©2017 SIMPSON STRONG-TIE COMPANY INC.